Pulsify Select S
Hand shower 105 3jet Relaxation
Surfaces: **Matt Black** Article Number: **24110670**



Description

product features

- shower head size: 105 mm
- spray type: PowderRain, IntenseRain, Massage spray
- convenient diversion via Select button
- spray disc surface: graphite
- maximum flow rate at 3 bar: 11,4 l/min
- flow rate PowderRain spray (at 3 bar): 11,4 l/min
- flow rate massage spray (at 3 bar): 9 l/min
- flow rate IntenseRain spray (at 3 bar): 11,4 l/min
- minimum flow pressure: 0,9 bar
- with internal water conduction
- rinseable sieve insert
- connection thread G ½
- connection dimension: DN15
- suitable for continous flow water heaters

Technology

Select

Quick Clean

XXL Performance

Design awards

DESIGN AWARD 2021

reddot winner 2021

Certificates

DIN DVGW CERT

Product image



Scale drawing

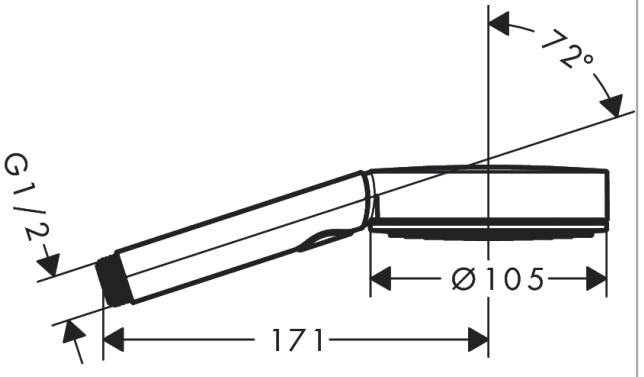

Pulsify Select S
Hand shower 105 3jet Relaxation
Surfaces: **Matt Black** Article Number: **24110670**



Flowchart

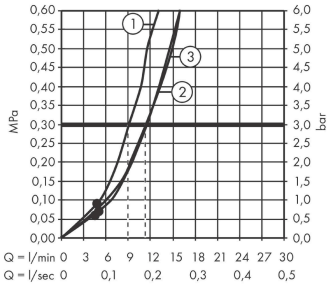

① Massage
② PowderRain
③ IntenseRain

The consumption was measured in combination with the appropriate fittings (thermostat/mixer/in-wall valve) to reflect actual application in practice.

Pulsify Select S
Hand shower 105 3jet Relaxation
Surfaces: **Matt Black** Article Number: **24110670**

Exploded Drawing

Year of production: **>06/21**



Pulsify Select S
Hand shower 105 3jet Relaxation
Surfaces: **Matt Black** Article Number: **24110670**



Spare part list

Year of production: **>06/21**

Pos.	Description	Article Number	Price	PU
1	filter	92672000	€ 5,24	1
2	seal	98058000	€ 3,21	1