Vernis Shape
Overhead shower 230 1jet
Surfaces: **Chrome** Article Number: **26281000**

Description

product features

- shower head size: 230 x 170 mm
- spray type: Rain
- ball-joint: overhead shower angle adjustable
- material spray disc: plastic
- maximum flow rate at 3 bar: 12,4 l/min
- function from: 5,2 l/min
- minimum flow pressure: 1 bar
- overhead shower removable for cleaning
- installation: ceiling or wall
- connection thread G ½
- connection dimension: DN15
- suitable for continous flow water heaters

Technology

Quick Clean

XXL Performance

Certificates

DIN DVGW CERT

Product image

Scale drawing

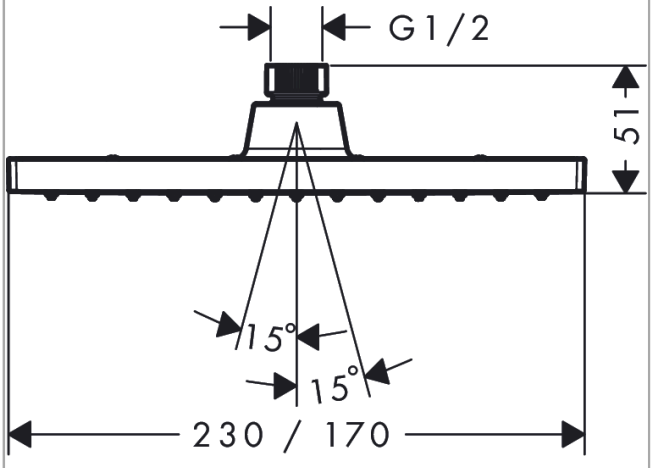

Flowchart

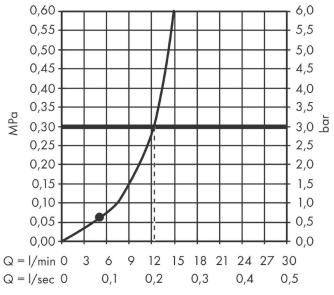

The consumption was measured in combination with the appropriate fittings (thermostat/mixer/in-wall valve) to reflect actual application in practice.

Vernis Shape
Overhead shower 230 1jet
Surfaces: **Chrome** Article Number: **26281000**

Exploded Drawing

Year of production: **>04/21**

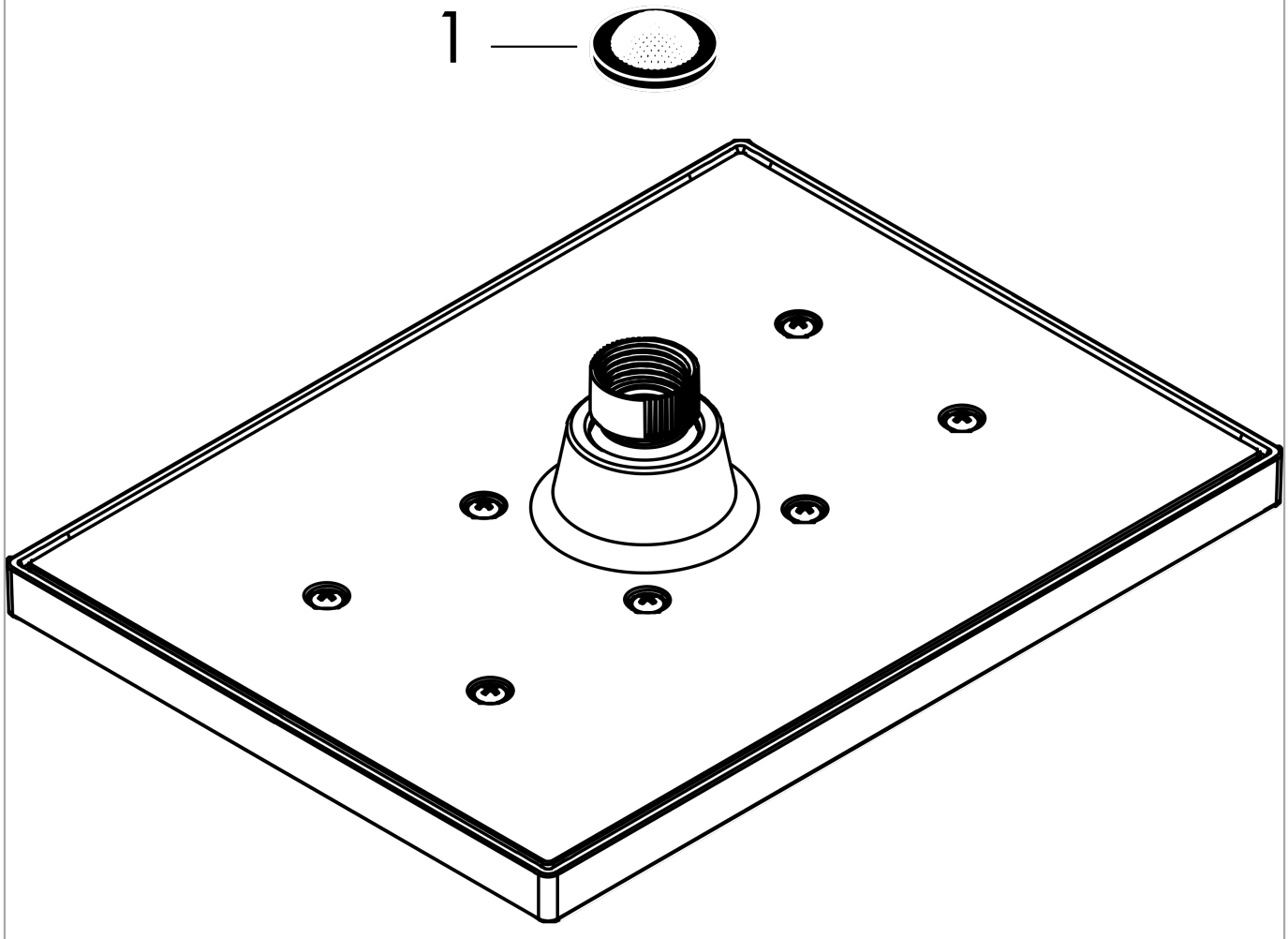

Vernis Shape
Overhead shower 230 1jet
Surfaces: **Chrome** Article Number: **26281000**

Spare part list

Year of production: **>04/21**

Pos.	Description	Article Number	Price	PU
1	filter packing	94246000	€ 3,21	1