Vernis Shape
Showerpipe 230 1jet with thermostat
Surfaces: **Chrome** Article Number: **26286000**

Description

product features

- consists of: overhead shower, hand shower, shower thermostat, shower hose, slider
- overhead shower Vernis Shape 230 1jet
- shower head size overhead shower: 230 x 170 mm
- spray type overhead shower: Rain
- ball-joint: overhead shower angle adjustable
- spray type hand shower: Rain, IntenseRain
- maximum flow rate at 3 bar: 15,2 l/min
- flow rate of hand shower at 3 bar: 15,2 l/min
- flow rate Rain spray (at 3 bar): 12,4 l/min
- minimum flow pressure: 1 bar
- min. operating pressure: 1 bar
- max. operating pressure: 10 bar
- shower bar diameter: 19 mm
- height-adjustable slider with locking push-button slider
- shower arm length overhead shower: 426 mm
- thermostat Vernis
- safety lock at 40°C
- adjustable hot water limitation
- outlets controlled via turning handle
- suitable for continuous flow water heaters
- mounting type: exposed installation
- connection dimension DN15
- connection thread G ½
- centre distance 150 ± 12 mm
- intrinsically safe against backflow
- pipe length: 1124 mm
- installation: wall-mounted
- 2 functions

Technology

Vernis Shape
Showerpipe 230 1jet with thermostat
Surfaces: **Chrome** Article Number: **26286000**

Product image

Scale drawing

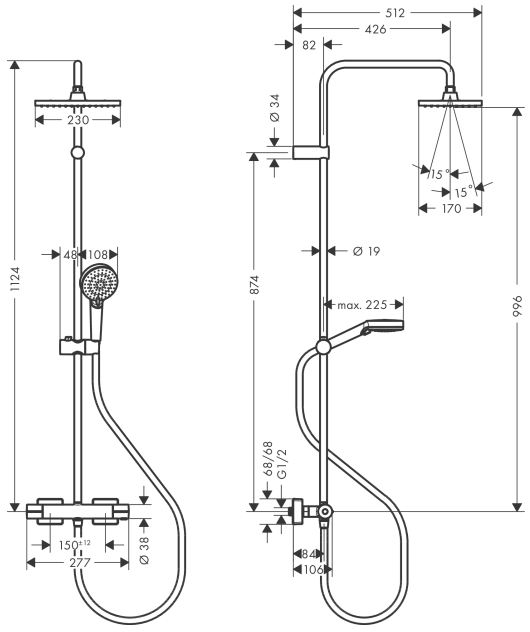

Flowchart

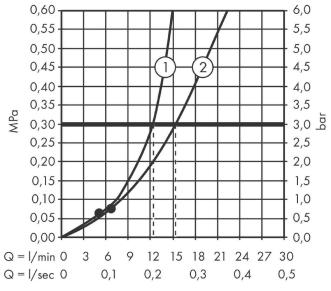

① Overhead shower
② Hand shower

Vernis Shape
Showerpipe 230 1jet with thermostat
Surfaces: **Chrome** Article Number: **26286000**

Exploded Drawing

Year of production: **>04/21**

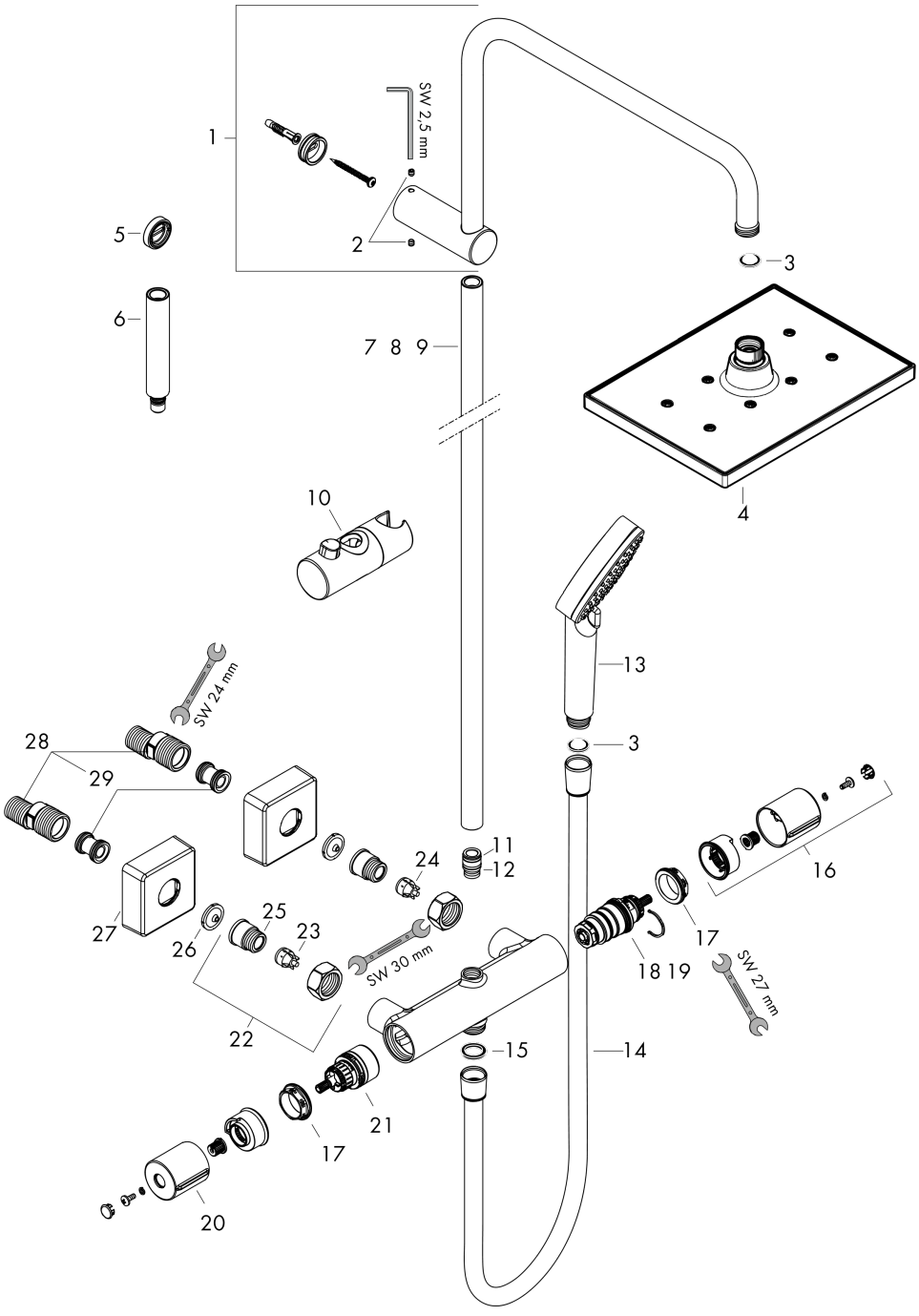

Vernis Shape
Showerpipe 230 1jet with thermostat
Surfaces: **Chrome** Article Number: **26286000**

Spare part list

Year of production: **>04/21**

Pos.	Description	Article Number	Price	PU
1	shower arm	93768000	€ 86,16	1
2	hollow set screw M5x5	98446000	€ 3,21	1
3	filter packing	94246000	€ 3,21	1
4	head shower	26281000	-	1
5	tile-matching-disk 7 mm	93813000	€ 13,92	1
6	extension 100 mm	94164000	€ 35,94	1
7	pipe 845 mm	93906000	€ 70,57	1
8	pipe 945 mm	93770000	€ 70,57	1
9	pipe 1145 mm	93907000	€ 70,57	1
10	support, assy	93729000	€ 28,20	1
11	O-ring 12x2	98214000	€ 3,21	1
12	O-ring 11x2	98127000	€ 3,21	1
13	handshower	26270000	-	1
14	shower hose Metaflex'C 1,60 m	28266000	-	1
15	seal	98058000	€ 3,21	1
16	handle for thermostat	93727000	€ 35,94	1
17	nut	98913000	€ 18,33	1
18	thermostat cartridge	98282000	€ 100,44	1
19	cartridge for exchanged connections	92373000	€ 249,90	1
20	handle	93731000	€ 28,20	1
21	shut off unit with selector	98283000	€ 70,57	1
22	connecting thread G½	93730000	€ 35,94	1
23	non return valve (pressure-resistant up to 2 MPa)	93136000	€ 28,20	1
24	non return valve	96737000	€ 28,20	1
25	O-ring 16x2	98133000	€ 3,21	1
26	filter packing	96922000	€ 8,45	1
27	escutcheon	93879000	€ 13,92	1
28	set of S-unions (±12 mm)	94140000	€ 44,63	1
29	noise reduction	96429000	€ 5,24	1