Crometta S
Showerpipe 240 1jet with single lever mixer
Surfaces: **Chrome** Article Number: **27269000**

Description

product features

- consists of: overhead shower, hand shower, single lever shower mixer, shower hose, hand shower holder, shower bar
- overhead shower Crometta S 240
- shower head size overhead shower: 240 mm
- spray type overhead shower: Rain
- ball-joint: overhead shower angle adjustable
- hand shower holder inclination angle can be adjusted by 45°
- spray disc surface: chrome
- spray type hand shower: Rain, IntenseRain
- flow rate Rain spray (at 3 bar): 15 l/min
- minimum flow pressure: 1,8 bar
- pipe can be shortened in height
- shower bar diameter: 22 mm
- height-adjustable hand shower holder
- shower arm length overhead shower: 350 mm
- suitable for continuous flow water heaters with an output of 18 kW
- mounting type: exposed installation
- connection dimension DN15
- connection thread G ½
- centre distance 150 ± 12 mm
- ceramic cartridge
- temperature limitation not adjustable
- adjustable hot water limitation
- installation: wall-mounted
- amount of outlet: 3 functions
- min. operating pressure: 1,8 bar
- max. operating pressure: 10 bar

Technology

Crometta S
Showerpipe 240 1jet with single lever mixer
Surfaces: **Chrome** Article Number: **27269000**

Product image

Scale drawing

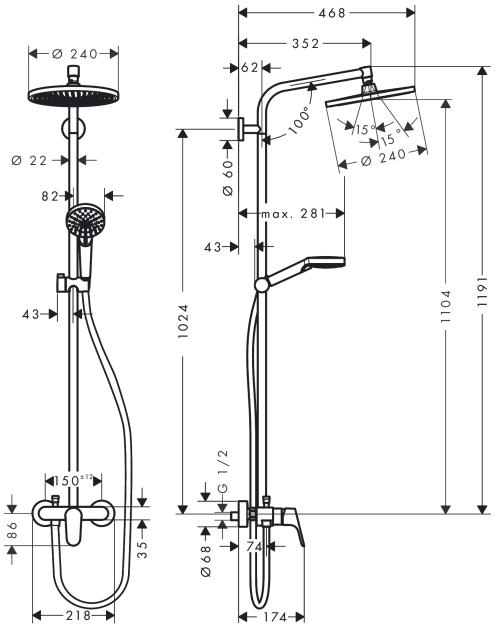

Flowchart

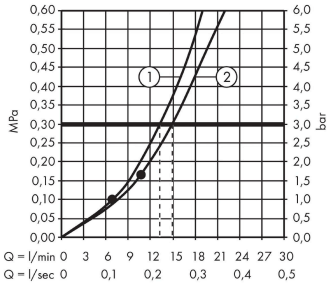

① Hand shower
② overhead shower

Crometta S
Showerpipe 240 1jet with single lever mixer
Surfaces: **Chrome** Article Number: **27269000**

Installation examples

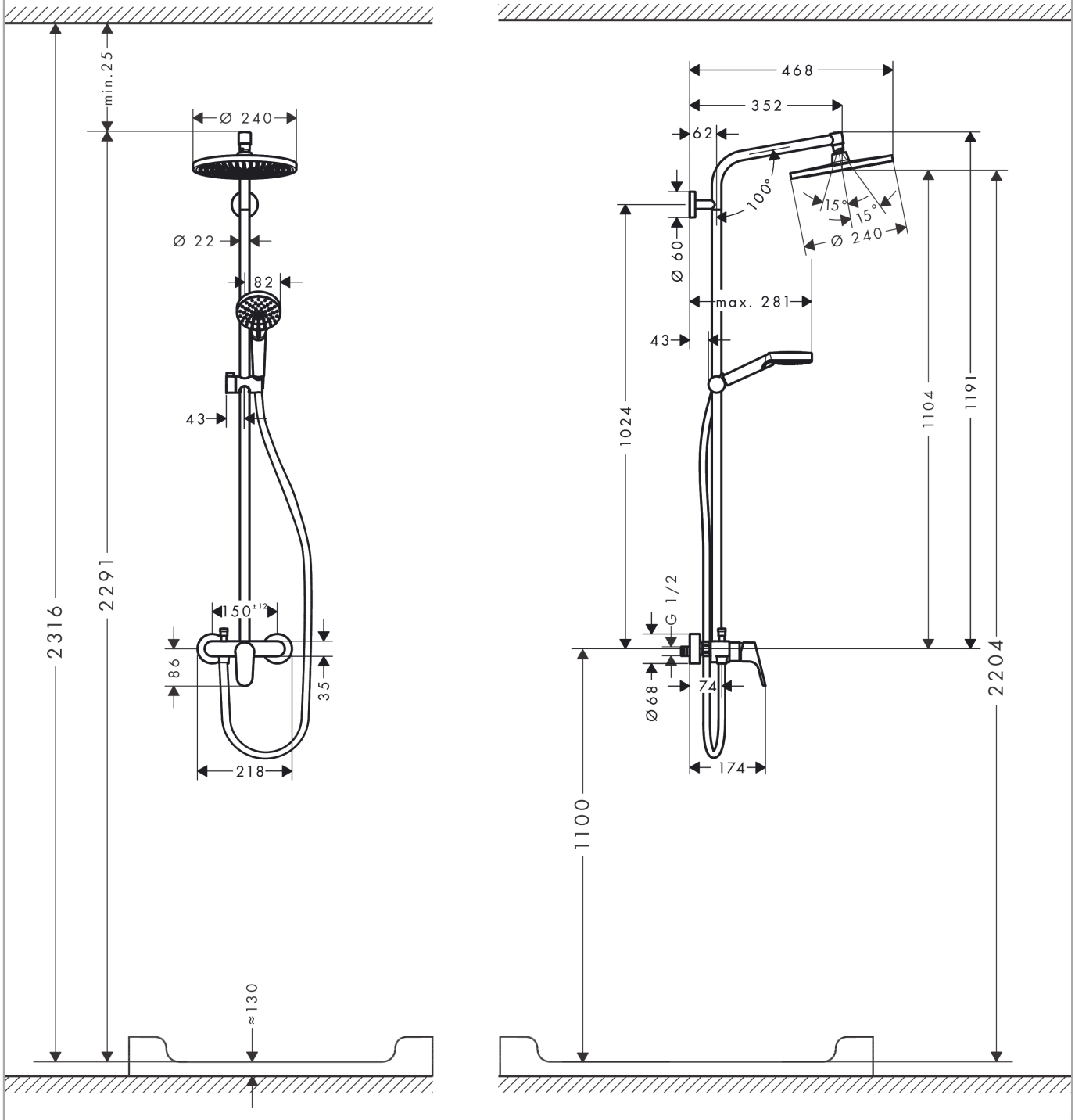

Crometta S
Showerpipe 240 1jet with single lever mixer
Surfaces: **Chrome** Article Number: **27269000**

Exploded Drawing

Year of production: **>04/16**

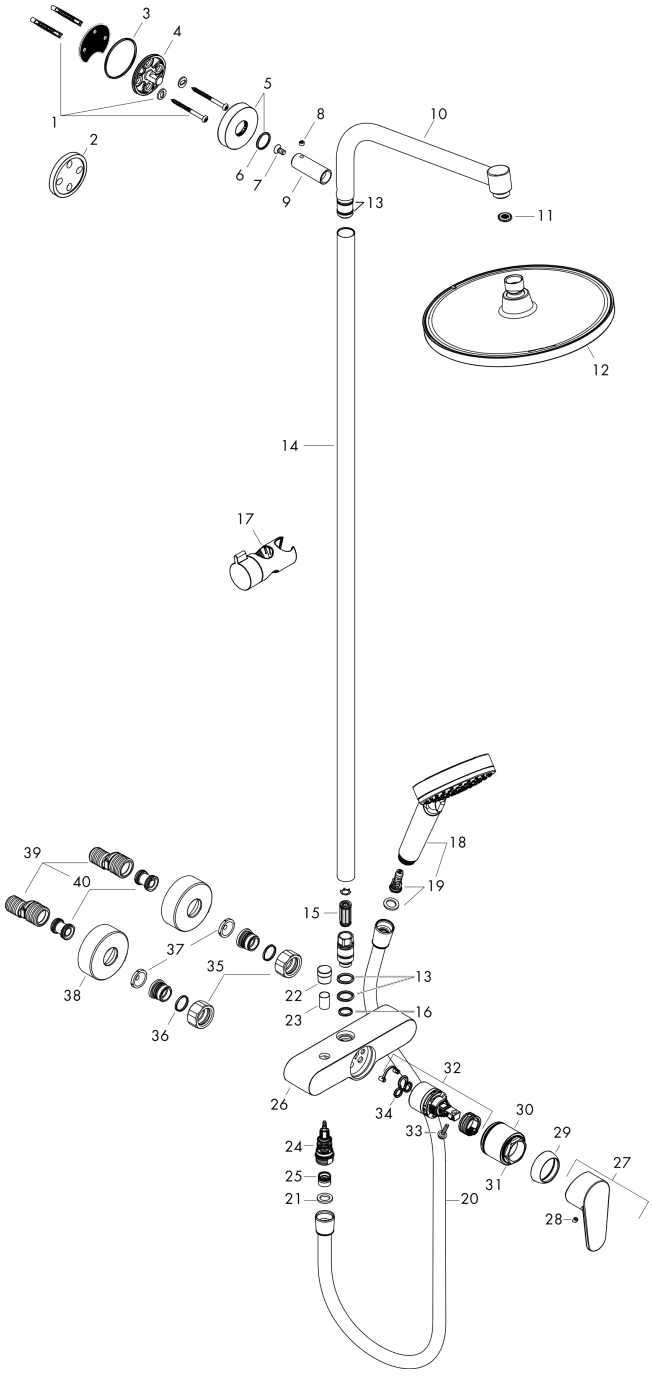

Crometta S
Showerpipe 240 1jet with single lever mixer
Surfaces: **Chrome** Article Number: **27269000**

Spare part list

Year of production: **>04/16**

Pos.	Description	Article Number	Price	PU
1	mounting set	96179000	€ 11,31	1
2	tile-matching-disk 7 mm	95239000	€ 13,92	1
3	O-Ring 50x2	98187000	€ 3,21	1
4	wall flange	95688000	€ 28,20	1
5	escutcheon Ø 60 mm	95692000	€ 18,33	1
6	O-ring 20x2	98165000	€ 3,21	1
7	screw	92137000	€ 5,24	1
8	hollow set screw M6x5	98447000	€ 3,21	1
9	sleeve	92166000	€ 35,94	1
10	shower arm	93072000	€ 124,95	1
11	filter packing	94246000	€ 3,21	1
12	head shower	26723000	-	1
13	O-ring 15x2,5	98131000	€ 3,21	1
14	pipe 1000 mm	96743000	€ 70,57	1
15	noise reduction	95009000	€ 8,45	1
16	O-ring 12x2,25	98382000	€ 3,21	1
17	support, assy	92366000	€ 35,94	1
18	handshower	26330400	-	1
19	filter insert	97708000	€ 5,24	1
20	shower hose Isiflex'B 1,60 m	28276000	-	1
21	seal	98058000	€ 3,21	1
22	diverter knob	97981000	€ 18,33	1
23	sleeve	97979000	€ 13,92	1
24	selector (invers)	95657000	€ 35,94	1
25	non return valve	97980000	€ 28,20	1
26	installation unit cpl. without handle	93674000	€ 329,87	1
27	handle	98532000	€ 28,20	1
28	screw cover	96338000	€ 3,21	1
29	flange	97406000	€ 18,33	1
30	nut	97977000	€ 35,94	1
31	O-Ring 32x2	98193000	€ 3,21	1
32	cartridge, assy	92730000	€ 57,12	1
33	locking screw for handle	95140000	€ 5,24	1
34	seal	95008000	€ 8,45	1
35	set of nuts	96157000	€ 28,20	1
36	O-ring 17x1,5	98137000	€ 3,21	1
37	filter packing	96922000	€ 8,45	1
38	escutcheon Ø 68 mm	96467000	€ 18,33	1
39	set of S-unions (±12 mm)	94140000	€ 44,63	1