Logis
Single lever basin mixer 70 with push-open waste set
Surfaces: **Chrome** Article Number: **71077000**

Description

product features

- consists of: single lever basin mixer, waste set
- ComfortZone 70
- projection: 107 mm
- spout height: 67 mm
- spray type: Normal spray
- maximum flow rate at 3 bar: 5 l/min
- ceramic cartridge
- temperature limitation adjustable
- suitable for continuous flow water heaters
- push-open waste set G 1¼
- material waste set: synthetic
- connection type: G ⅜ connections
- connection dimension: DN15

Technology

AirPower
EcoSmart
Comfort Zone

Certificates

DIN DVGW CERT

Product image

Scale drawing

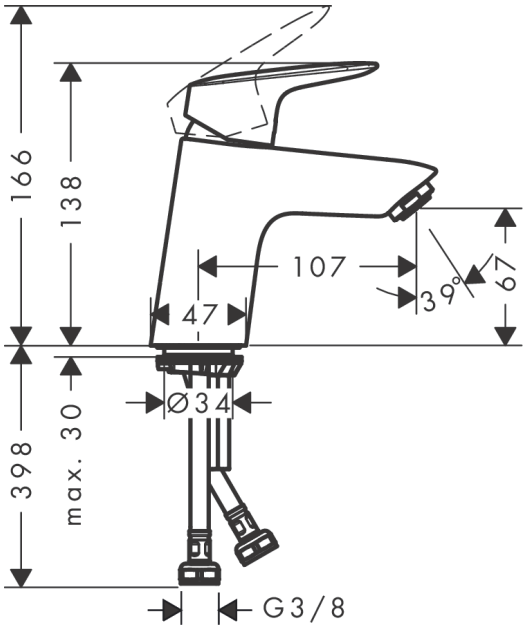

Logis
Single lever basin mixer 70 with push-open waste set
Surfaces: **Chrome** Article Number: **71077000**

Flowchart

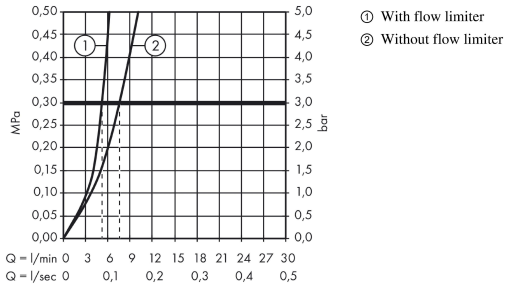

Logis
Single lever basin mixer 70 with push-open waste set
Surfaces: **Chrome** Article Number: **71077000**

Exploded Drawing

Year of production: **>05/17**

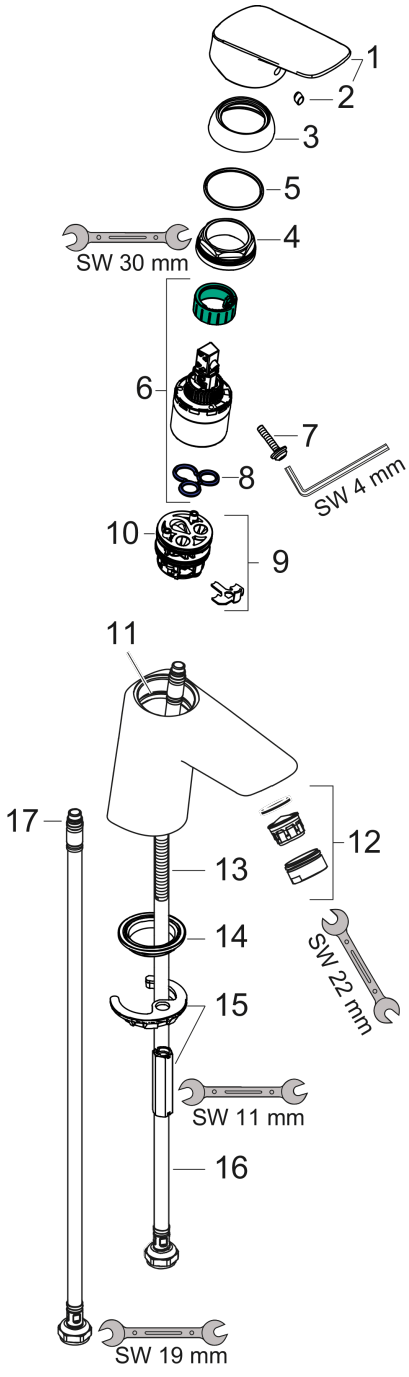

Logis
Single lever basin mixer 70 with push-open waste set
Surfaces: **Chrome** Article Number: **71077000**

Spare part list

Year of production: **>05/17**

Pos.	Description	Article Number	Price	PU
1	handle	92224000	€ 44,63	1
2	screw cover	96338000	€ 3,21	1
3	flange	97406000	€ 18,33	1
4	nut	97209000	€ 13,92	1
5	O-Ring 32x2	98193000	€ 3,21	1
6	cartridge, assy	92730000	€ 57,12	1
7	locking screw for handle	95140000	€ 5,24	1
8	seal	95008000	€ 8,45	1
9	adapter for cartridge	98750000	€ 11,31	1
10	O-Ring 30x2	98186000	€ 3,21	1
11	O-ring 35x2	92604000	€ 5,24	1
12	aerator M24x1 (5 l/min)	92372000	€ 18,33	1
13	screw M8 x 68	97736000	€ 5,24	1
14	seal Ø 42	98722000	€ 5,24	1
15	fixing set	96016000	€ 28,20	1
16	connection hose 450 mm M8x0,75 G3/8	97206000	€ 28,20	1
17	O-ring 6,6x1,6	93019000	€ 3,21	1
a	push-open waste set	50105000	-	1