Vernis Blend
Single lever bath mixer for concealed installation for iBox universal
Surfaces: **Chrome** Article Number: **71466000**

Description

product features

- 2 functions
- flow rate upper outlet: 21 l/min
- flow rate lower outlet: 29 l/min
- maximum flow rate at 3 bar: 29 l/min
- ceramic cartridge
- temperature limitation adjustable
- diverter with automatic resetting
- suitable for continous flow water heaters
- connection type: basic set
- min. operating pressure: 1 bar
- max. operating pressure: 10 bar

Product image

Scale drawing

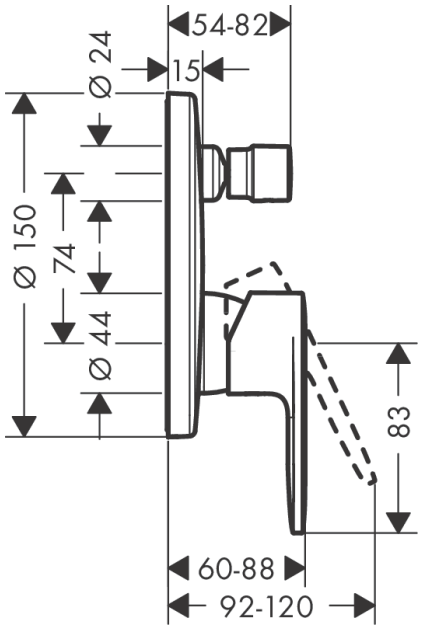

Flowchart

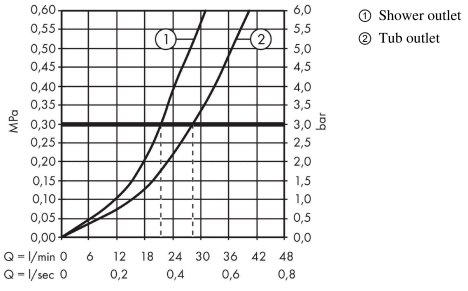

Vernis Blend
Single lever bath mixer for concealed installation for iBox universal
Surfaces: **Chrome** Article Number: **71466000**

Exploded Drawing

Year of production: **>04/21**

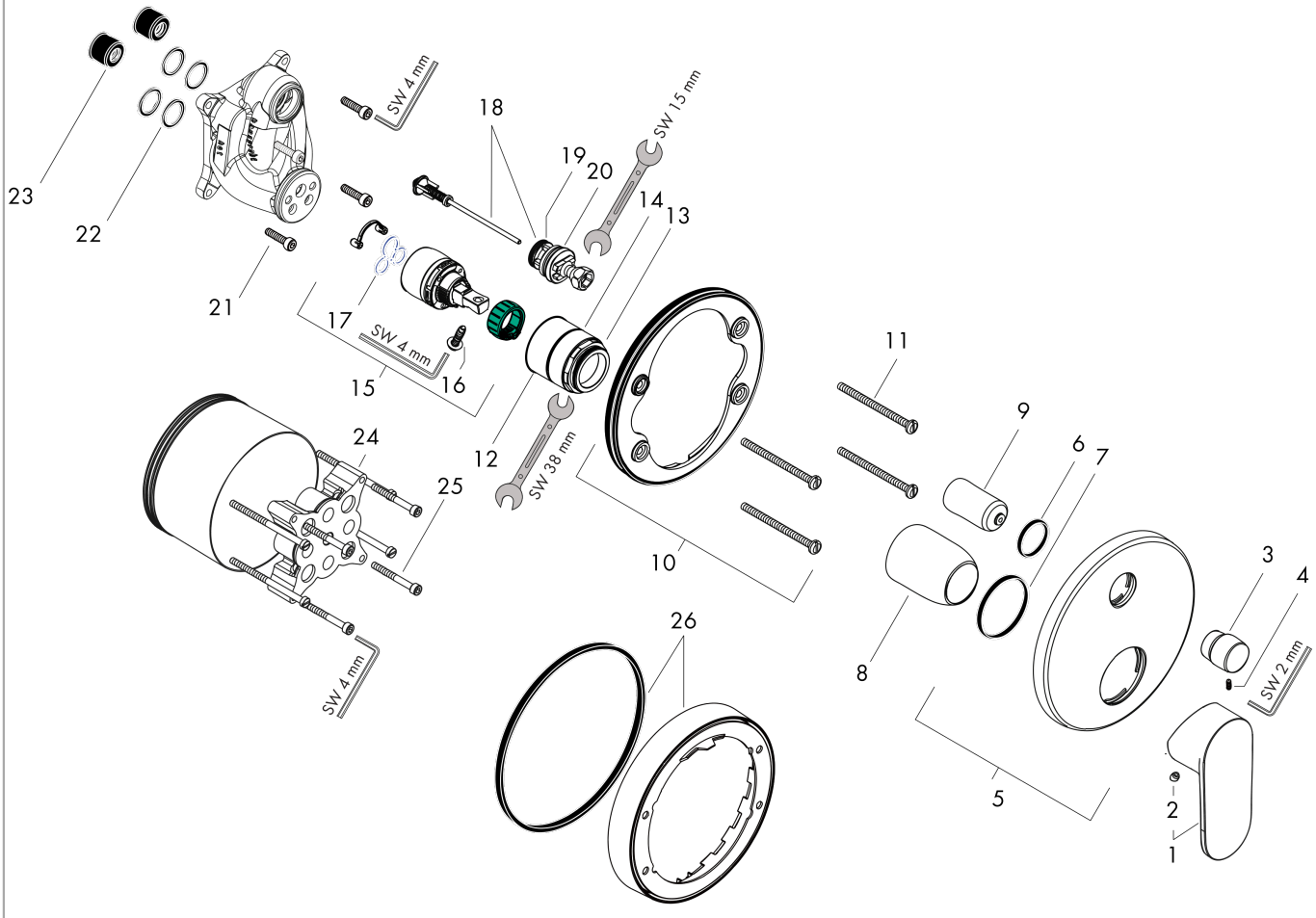

Vernis Blend
Single lever bath mixer for concealed installation for iBox universal
Surfaces: **Chrome** Article Number: **71466000**

Spare part list

Year of production: **>04/21**

Pos.	Description	Article Number	Price	PU
1	handle	93715000	€ 35,94	1
2	screw cover	96338000	€ 3,21	1
3	diverter knob	98795000	€ 44,63	1
4	hollow set screw M4x10	97667000	€ 3,21	1
5	escutcheon Ø 150 mm	98791000	€ 57,12	1
6	O-ring 43x3	98418000	€ 3,21	1
7	O-ring 23x3	98142000	€ 3,21	1
8	sleeve	98790000	€ 28,20	1
9	sleeve	98794000	€ 28,20	1
10	holder for escutcheon	98793000	€ 35,94	1
11	set of fixing screws	96454000	€ 8,45	1
12	nut	98796000	€ 35,94	1
13	O-ring 30x1,5	98433000	€ 3,21	1
14	O-ring 39x1,5	98400000	€ 3,21	1
15	cartridge, assy	92730000	€ 57,12	1
16	locking screw for handle	95140000	€ 5,24	1
17	seal	95008000	€ 8,45	1
18	selector assy	95014000	€ 57,12	1
19	O-ring 16x2,3	98207000	€ 3,21	1
20	O-ring 20x2,5	92602000	€ 5,24	1
21	set of screws	96525000	€ 8,45	1
22	O-ring 16x2	98133000	€ 3,21	1
23	noise reduction	94073000	€ 22,37	1
24	extension 25 mm	13595000	-	1
25	set of fixing screws	97747000	€ 3,21	1
26	extension 22 mm (Ø 150 mm)	13597000	-	1