Vernis Blend
Single lever basin mixer 100 with pop-up waste set
Surfaces: **Chrome** Article Number: **71551000**

Description

product features

- consists of: single lever basin mixer, waste set
- ComfortZone 100
- projection: 108 mm
- spout height: 88 mm
- spray type: Normal spray
- swiveling spray former
- maximum flow rate at 3 bar: 5 l/min
- ceramic cartridge
- temperature limitation adjustable
- suitable for continuous flow water heaters
- pop-up waste set G 1¼
- material waste set: synthetic
- connection type: G ⅜ connections
- connection dimension: DN15

Technology

AirPower
EcoSmart
Comfort Zone

Certificates

DIN DVGW CERT

Product image

Scale drawing

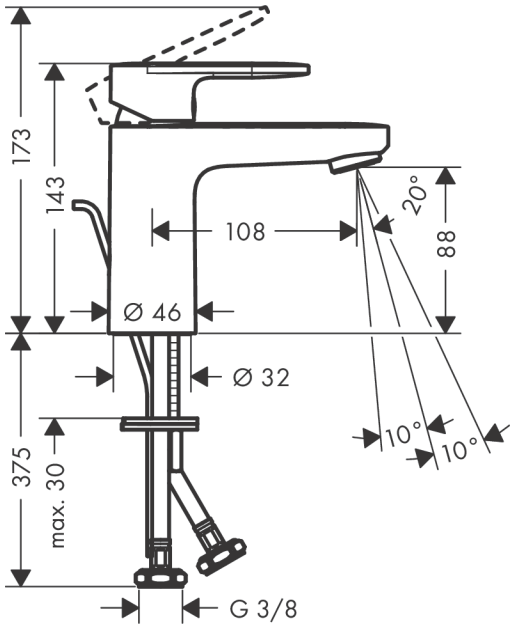

Vernis Blend
Single lever basin mixer 100 with pop-up waste set
Surfaces: **Chrome** Article Number: **71551000**

Flowchart

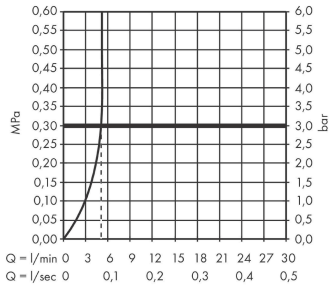

Vernis Blend
Single lever basin mixer 100 with pop-up waste set
Surfaces: **Chrome** Article Number: **71551000**

Exploded Drawing

Year of production: **>01/21**

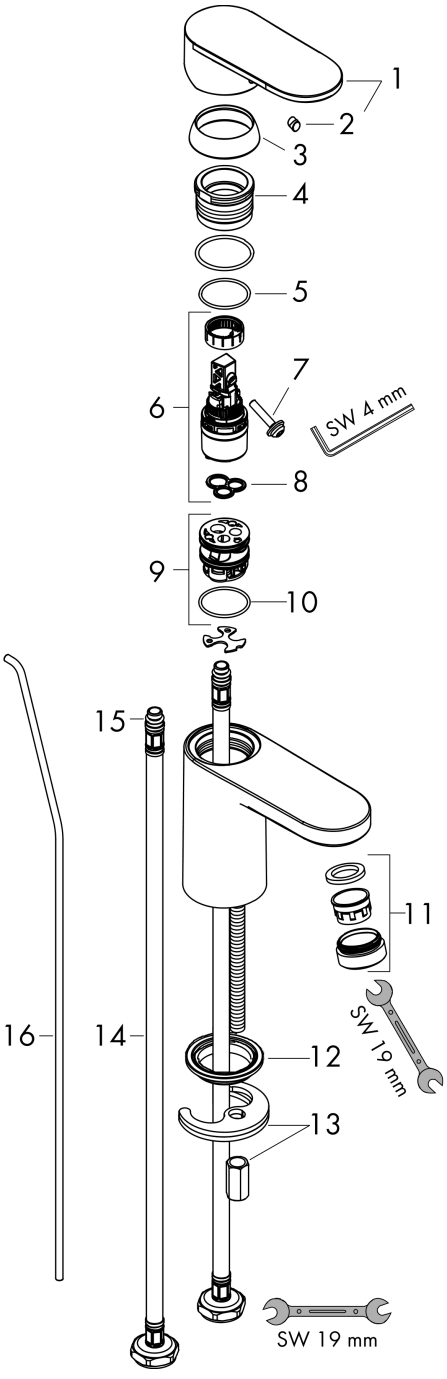

Vernis Blend
Single lever basin mixer 100 with pop-up waste set
Surfaces: **Chrome** Article Number: **71551000**

Spare part list

Year of production: **>01/21**

Pos.	Description	Article Number	Price	PU
1	handle	93678000	€ 28,20	1
2	screw cover	96338000	€ 3,21	1
3	flange	93680000	€ 22,37	1
4	nut	93681000	€ 18,33	1
5	O-ring 24x1,5	98434000	€ 3,21	1
6	cartridge, assy	97685000	€ 57,12	1
7	locking screw for handle	95140000	€ 5,24	1
8	seal	98865000	€ 28,20	1
9	adapter for cartridge	98866000	€ 28,20	1
10	O-ring 23x2	98398000	€ 3,21	1
11	aerator swivelling M24x1 (5 l/min)	93834000	€ 18,33	1
12	seal Ø 42	98722000	€ 5,24	1
13	fixing set	96016000	€ 28,20	1
14	connection hose 600 mm M8x0,75 G3/8	96556000	€ 22,37	1
15	O-ring 7x1,5	98422000	€ 3,21	1
16	pull rod	93683000	€ 11,31	1
a	pop up waste	92168000	€ 35,94	1
b	lever arm 340mm (ball-Ø12mm)	96324000	€ 22,37	1