Vernis Blend
Single lever basin mixer for concealed installation wall-mounted with spout 20,7 cm
Surfaces: **Chrome** Article Number: **71576000**

Description

product features

- projection: 207 mm
- spray type: Normal spray
- maximum flow rate at 3 bar: 5 l/min
- ceramic cartridge
- suitable for continuous flow water heaters
- connection type: basic set
- connection dimension: DN15
- handle can be positioned on the right or left, depends on the basic set installation

Technology

AirPower

EcoSmart

Certificates

DIN DVGW CERT

Product image

Scale drawing

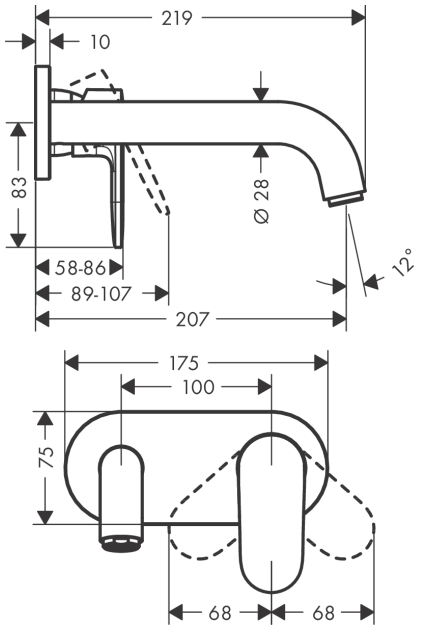

Flowchart

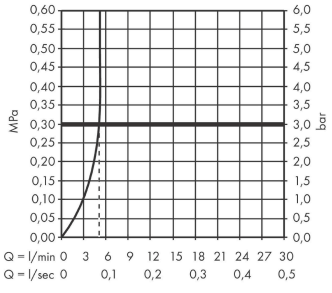

Vernis Blend
Single lever basin mixer for concealed installation wall-mounted with spout 20,7 cm
Surfaces: **Chrome** Article Number: **71576000**

Exploded Drawing

Year of production: **>04/21**

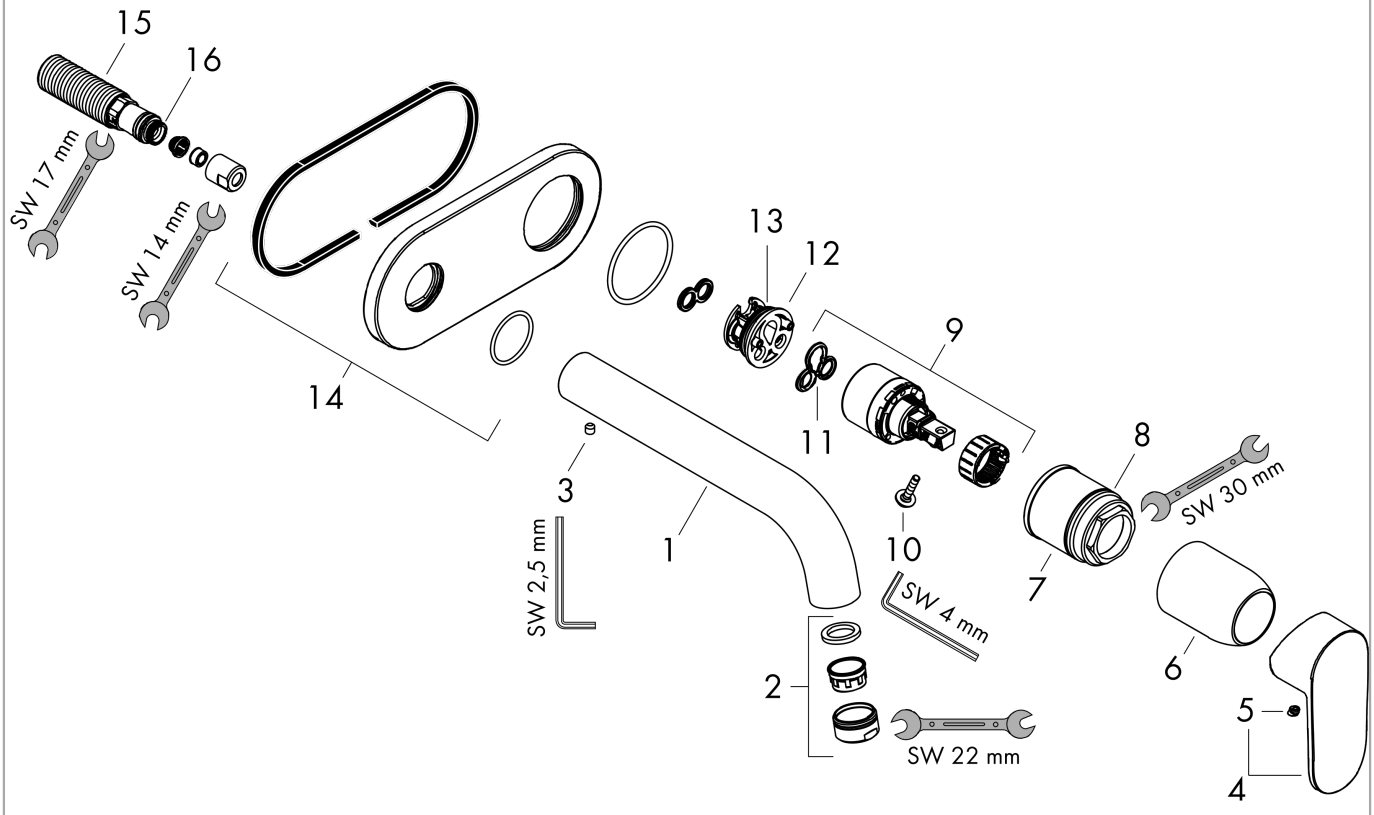

Vernis Blend
Single lever basin mixer for concealed installation wall-mounted with spout 20,7 cm
Surfaces: **Chrome** Article Number: **71576000**

Spare part list

Year of production: **>04/21**

Pos.	Description	Article Number	Price	PU
1	spout cpl.	93710000	€ 44,63	1
2	aerator M24x1	92254000	€ 35,94	1
3	hollow set screw M5x5	98446000	€ 3,21	1
4	handle	93678000	€ 28,20	1
5	screw cover	96338000	€ 3,21	1
6	sleeve	98790000	€ 28,20	1
7	nut	95622000	€ 35,94	1
8	O-ring 39x1,5	98400000	€ 3,21	1
9	cartridge, assy	92730000	€ 57,12	1
10	locking screw for handle	95140000	€ 5,24	1
11	seal	95008000	€ 8,45	1
12	adapter for cartridge	95779000	€ 13,92	1
13	O-ring 26x2	98147000	€ 3,21	1
14	escutcheon	93714000	€ 35,94	1
15	connecting thread G½	93771000	€ 22,37	1
16	O-ring 13x2	98128000	€ 3,21	1
a	base body	13622180	-	1
b	waste	50001000	-	1
c	extension set 25 mm for 13622180	31971000	-	1