Vernis Blend
Single lever shower mixer for exposed installation
Surfaces: **Chrome** Article Number: **71640000**

Description

product features

- 1 function
- centre distance: 150 ± 12 mm
- maximum flow rate at 3 bar: 28 l/min
- flow rate of hand shower at 3 bar: 16 l/min
- ceramic cartridge
- temperature limitation adjustable
- non-return valve
- with silencer
- suitable for continous flow water heaters
- hose connection DN15
- connection dimension: DN15
- connection type: s-shaped connections
- min. operating pressure: 1 bar
- max. operating pressure: 10 bar

Certificates

DIN DVGW CERT

Product image

Scale drawing

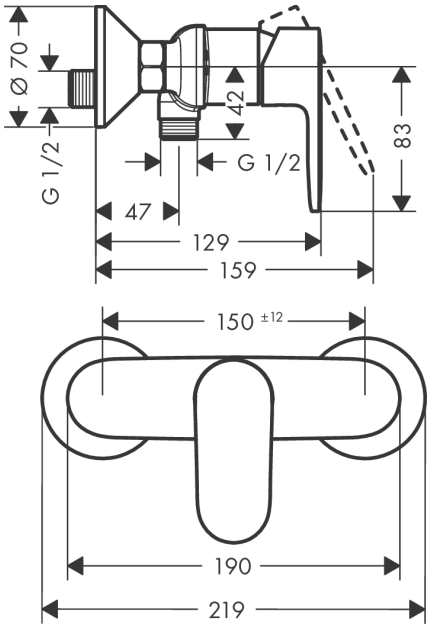

Vernis Blend
Single lever shower mixer for exposed installation
Surfaces: **Chrome** Article Number: **71640000**

Flowchart

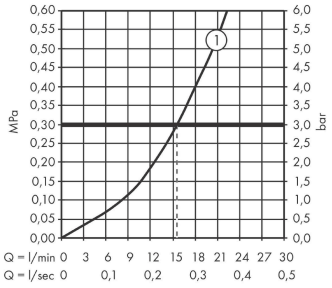

Shower outlet with 1B-resistance

Vernis Blend
Single lever shower mixer for exposed installation
Surfaces: **Chrome** Article Number: **71640000**

Exploded Drawing

Year of production: **>01/21**

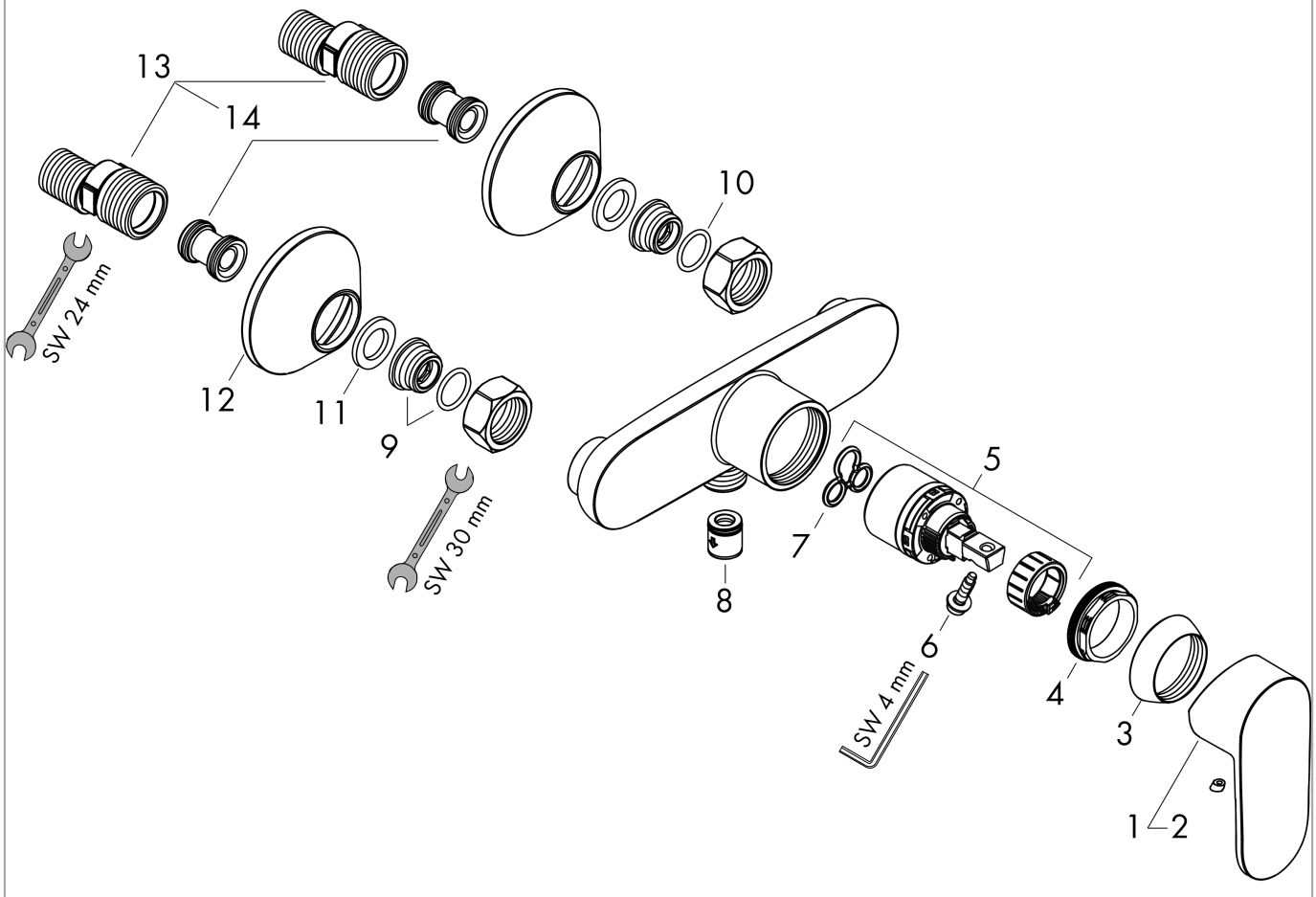

Vernis Blend
Single lever shower mixer for exposed installation
Surfaces: **Chrome** Article Number: **71640000**

Spare part list

Year of production: **>01/21**

Pos.	Description	Article Number	Price	PU
1	handle	93715000	€ 35,94	1
2	screw cover	96338000	€ 3,21	1
3	flange	93716000	€ 5,24	1
4	nut	93717000	€ 11,31	1
5	cartridge, assy	92730000	€ 57,12	1
6	locking screw for handle	95140000	€ 5,24	1
7	seal	95008000	€ 8,45	1
8	set of non return valves DW 15	94074000	€ 13,92	1
9	connecting thread G½	93767000	€ 8,45	1
10	O-ring 16x2	98133000	€ 3,21	1
11	filter packing	96922000	€ 8,45	1
12	escutcheon Ø 70 mm	93718000	€ 11,31	1
13	set of S-unions (±12 mm)	94140000	€ 44,63	1
14	noise reduction	96429000	€ 5,24	1