Logis M31
Single lever kitchen mixer 160, 1jet
Surfaces: **Chrome** Article Number: **71832000**

Description

product features

- ComfortZone 160
- swivel range 360°
- Normal spray
- connection dimension: DN15
- maximum flow rate at 3 bar: 12 l/min
- ceramic cartridge
- connection type: G ⅜ connections
- temperature limitation adjustable
- suitable for continuous flow water heaters

Technology

AirPower

Comfort Zone

Product image

Scale drawing

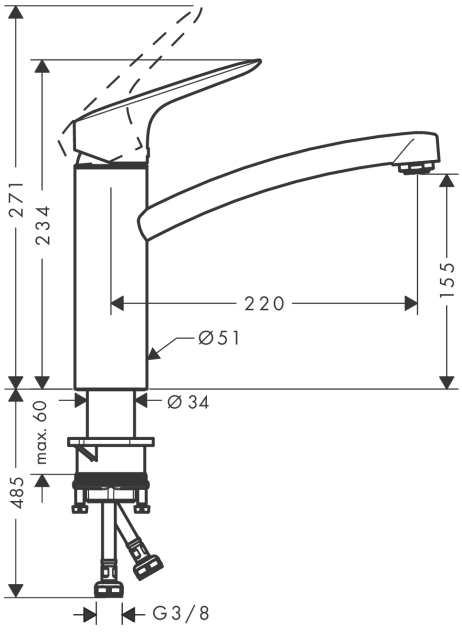

Flowchart

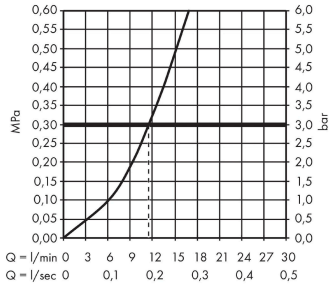

Logis M31
Single lever kitchen mixer 160, 1jet
Surfaces: **Chrome** Article Number: **71832000**

Exploded Drawing

Year of production: **>02/15**

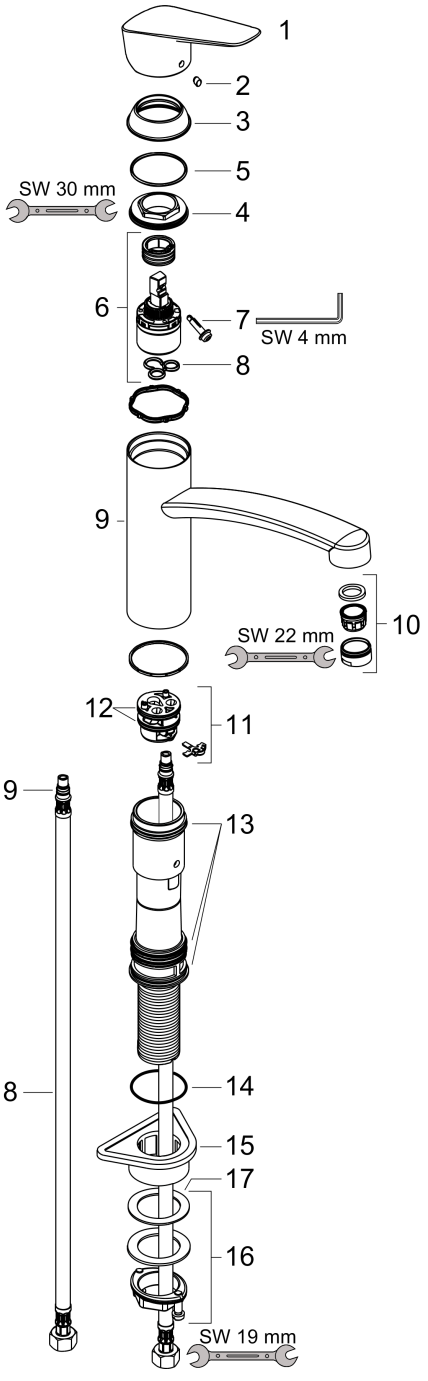

Logis M31
Single lever kitchen mixer 160, 1jet
Surfaces: **Chrome** Article Number: **71832000**

Spare part list

Year of production: **>02/15**

Pos.	Description	Article Number	Price	PU
1	handle	92465000	€ 57,12	1
2	screw cover	96338000	€ 3,21	1
3	flange	97995000	€ 18,33	1
4	nut	97996000	€ 28,20	1
5	O-ring 41x2	98212000	€ 3,21	1
6	cartridge, assy	92730000	€ 57,12	1
7	locking screw for handle	95140000	€ 5,24	1
8	seal	95008000	€ 8,45	1
9	spout cpl.	98349000	€ 100,44	1
10	aerator M24x1 (15 l/min)	92510000	€ 11,31	1
11	adapter for cartridge	98750000	€ 11,31	1
12	O-Ring 30x2	98186000	€ 3,21	1
13	sealing set	98702000	€ 8,45	1
14	O-Ring 36x2,5	98190000	€ 3,21	1
15	support	97523000	€ 5,24	1
16	fixing set (Ø 34)	95049000	€ 13,92	1
17	lever collar	97548000	€ 3,21	1
18	connection hose 600 mm M8x0,75 G3/8	96556000	€ 22,37	1
19	O-ring 7x1,5	98422000	€ 3,21	1