Logis M31
Single lever kitchen mixer 260, 1jet
Surfaces: **Chrome** Article Number: **71835000**

Description

product features

- handle can be positioned on the right or left
- ComfortZone 260
- swivel range adjustable in 3 steps 110°, 150° or 360°
- Normal spray
- connection dimension: DN15
- maximum flow rate at 3 bar: 12 l/min
- ceramic cartridge
- connection type: G ⅜ connections
- temperature limitation adjustable
- suitable for continuous flow water heaters

Technology

Product image

Scale drawing

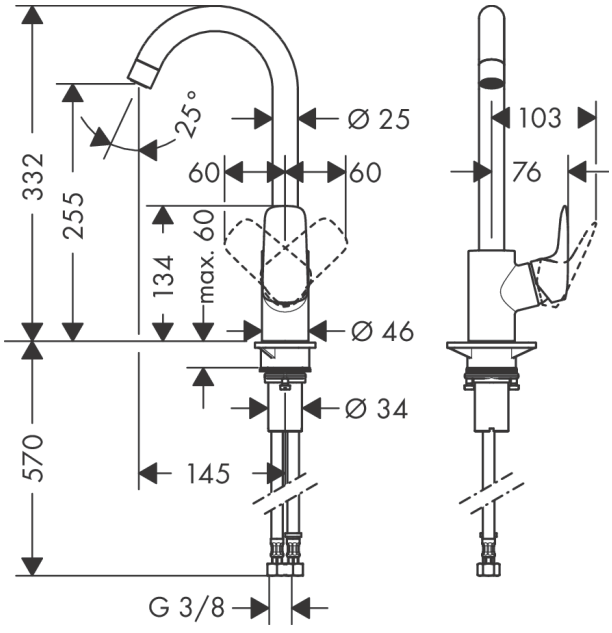

Flowchart

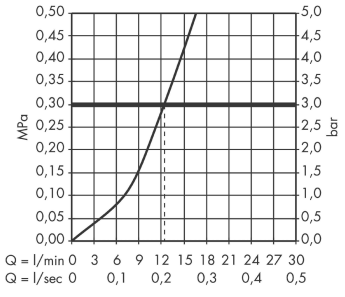

Logis M31
Single lever kitchen mixer 260, 1jet
Surfaces: **Chrome** Article Number: **71835000**

Exploded Drawing

Year of production: **>02/15**

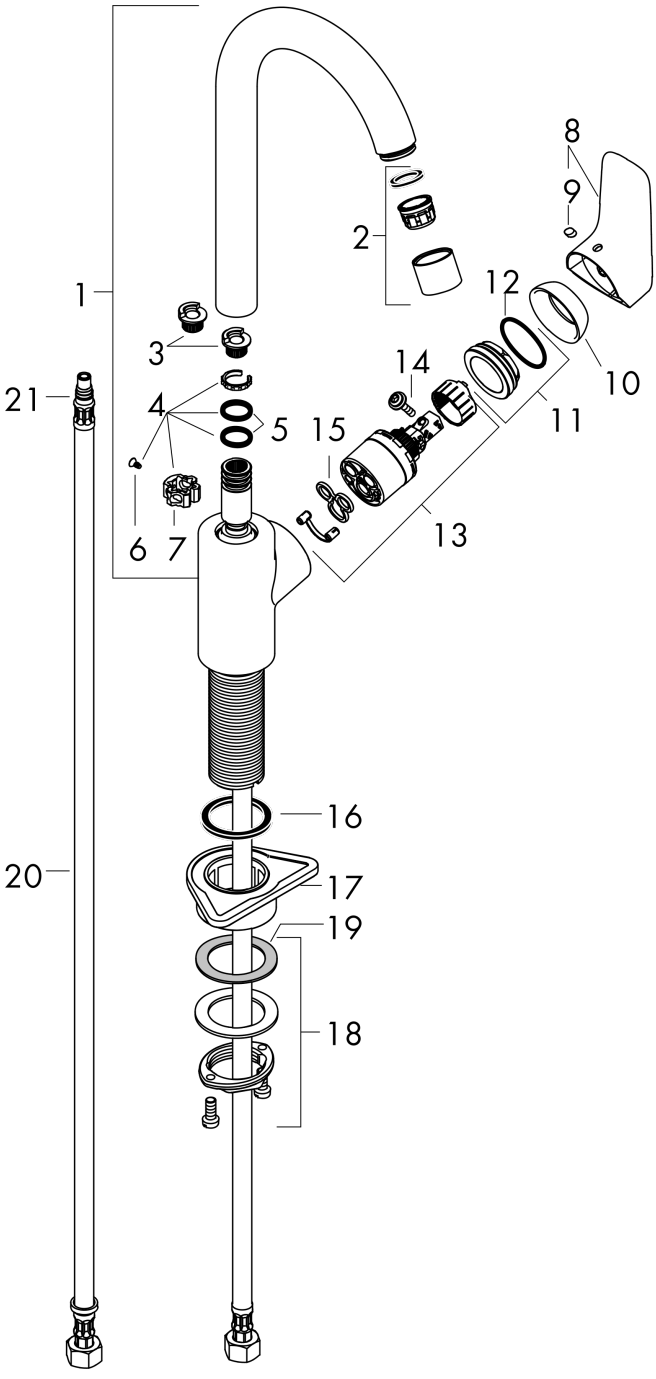

Logis M31
Single lever kitchen mixer 260, 1jet
Surfaces: **Chrome** Article Number: **71835000**

Spare part list

Year of production: **>02/15**

Pos.	Description	Article Number	Price	PU
1	spout cpl.	92223000	€ 86,16	1
2	aerator M22x1 (15 l/min)	92368000	€ 22,37	1
3	set of locating rings (110° / 150°)	98486000	€ 13,92	1
4	sealing set	92646000	€ 18,33	1
5	O-Ring 14x2,5	98189000	€ 3,21	1
6	screw	97662000	€ 8,45	1
7	axialring	97558000	€ 3,21	1
8	handle	92224000	€ 44,63	1
9	screw cover	96338000	€ 3,21	1
10	flange	95498000	€ 8,45	1
11	nut	97209000	€ 13,92	1
12	O-Ring 32x2	98193000	€ 3,21	1
13	cartridge, assy	92730000	€ 57,12	1
14	locking screw for handle	95140000	€ 5,24	1
15	seal	95008000	€ 8,45	1
16	flat seal	98749000	€ 5,24	1
17	support	97523000	€ 5,24	1
18	fixing set (Ø 34)	95049000	€ 13,92	1
19	lever collar	97548000	€ 3,21	1
20	connection hose 600 mm M8x0,75 G3/8	96556000	€ 22,37	1
21	O-ring 7x1,5	98422000	€ 3,21	1