Rotary Actuator
M6061

APPLICATION

The M6061 actuator is designed to provide floating control in heating and air conditioning systems. High control performance and a robust design are standard for this actuator.

In combination with the valves DRG/DR/DRU/DRR/ZR, it is possible to control very exact heating and cooling water temperatures.

The mechanical interface between actuator and valve is designed for reliable operation.

Actuators with torques from 10 Nm up to 40 Nm are available for a wide range of rotary mixing valves (DN 15 up to DN 200).

APPROVALS

- CE

SPECIAL FEATURES

- Protected against overload and blocking
- Maintenance-free electrical actuator for rotary valves
- Clear position indicator
- Direct mounting on rotary valves
- Manual operation
- High torque
- Large wiring cabinet
- Long lifetime

TECHNICAL DATA

Specifications	
Power supply:	230 V AC / 24 V AC; 50-60 Hz depending on type (see table)
Power consumption:	3.5 W
Control signal:	230 V AC / 24 V AC, floating depending on type (see table)
Protection standard:	IP 54 per EN 60529
Type of action:	1
Degree of pollution:	2
Rated impulse voltage:	2500 V at 230 V, 500 V at 24 V
Temperature for ball pressure test:	75 °C
Angle of rotation:	90°
Insulation class:	I per EN 60730
Ambient operating temperature:	0 to 60 °C
Water temperature in valve:	2 to 130 °C
Max. relative air humidity:	non-condensing
Weight:	1.5 kg

METHOD OF OPERATION

The actuator is powered by a synchronous motor. The spindle of the actuator rotates 90 °. In the end positions, the motor is switched off by end switches. Manual operation declutches the gear from the valve. As soon as the actuator is powered, the valve is driven by the actuator again. No adjustment necessary. The actuator is maintenance-free.

WIRING

Before mounting the actuator, position the rotary valve according to its installation instruction.
The required cross-sectional area of power conductors are according norm minimal 0.75 mm^2.

Recommended cable type H05VV-F.

Installation Example

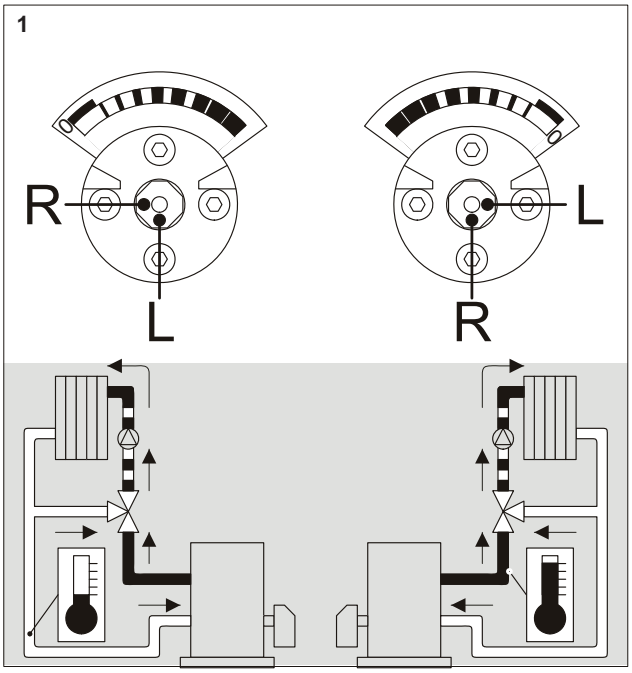

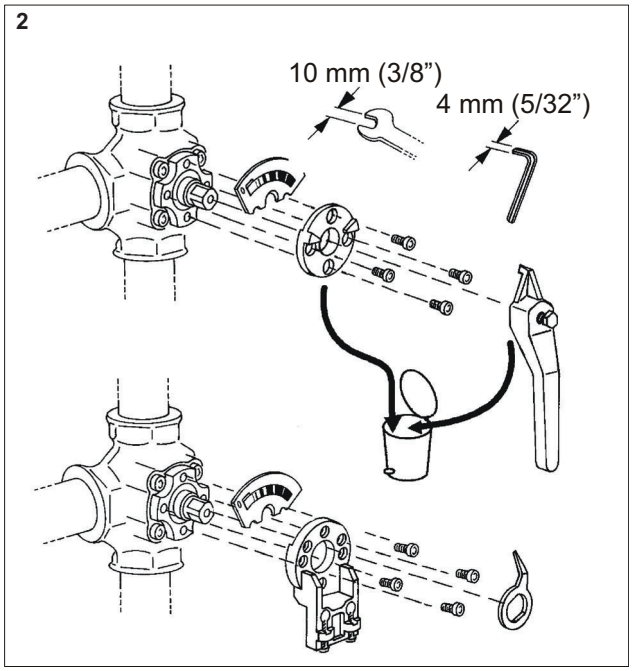

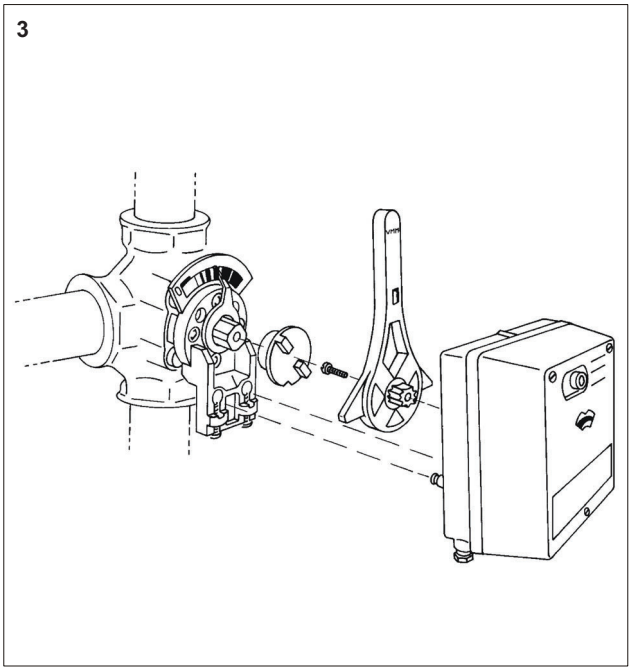

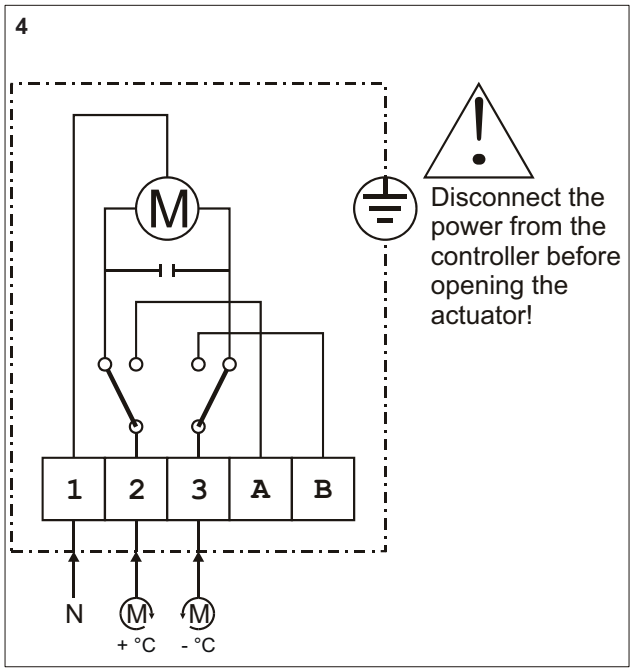

DIMENSIONS

Overview

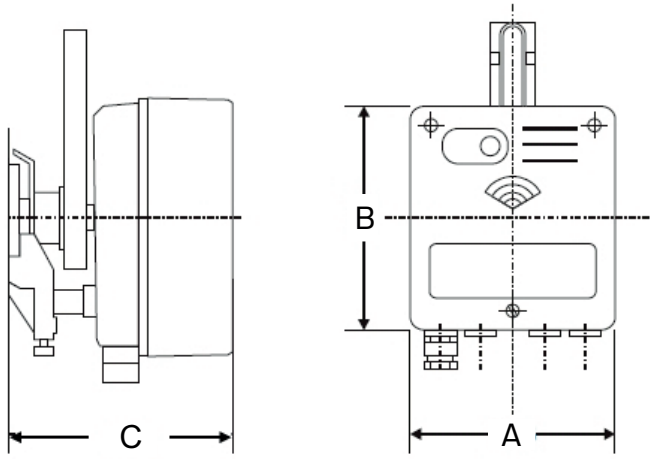

A	B	C	Type
133	146	131	M6061

Note: All dimensions in mm unless stated otherwise.

Dimensions in combination with DRxxxGMLA

Overview

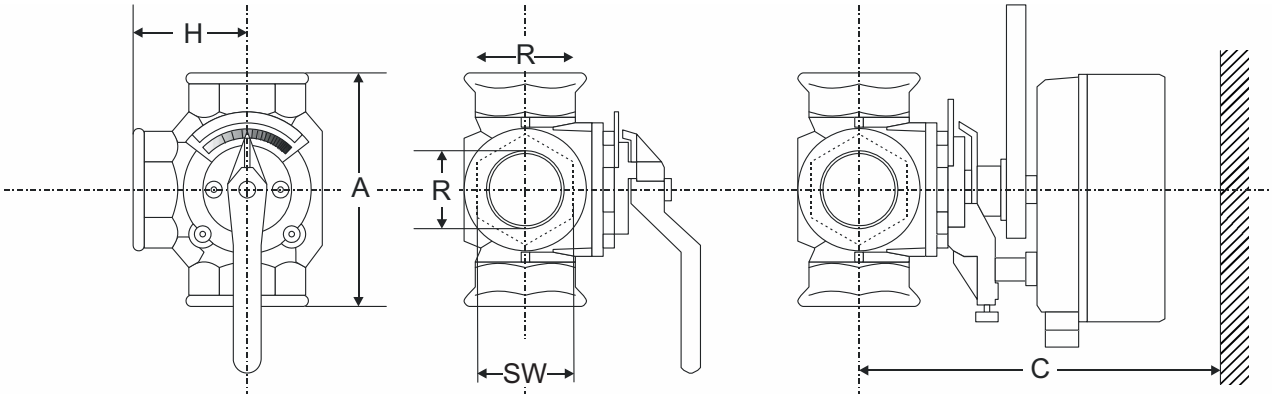

DN	A	C	SW	H	R	Net weight	Item No.
15	110	230	41	55	1/2"	2.2 kg	DR15-2GMLA
15	110	230	41	55	1/2"	2.2 kg	DR15GMLA
20	110	230	46	55	3/4"	2.3 kg	DR20GMLA
25	115	230	50	58	1"	2.4 kg	DR25GMLA
32	140	240	60	70	1 1/4"	4.1 kg	DR32GMLA
40	150	240	65	75	1 1/2"	4.3 kg	DR40GMLA

Note: All dimensions in mm unless stated otherwise.

Dimensions in combination with DRxxxGFLA

Overview

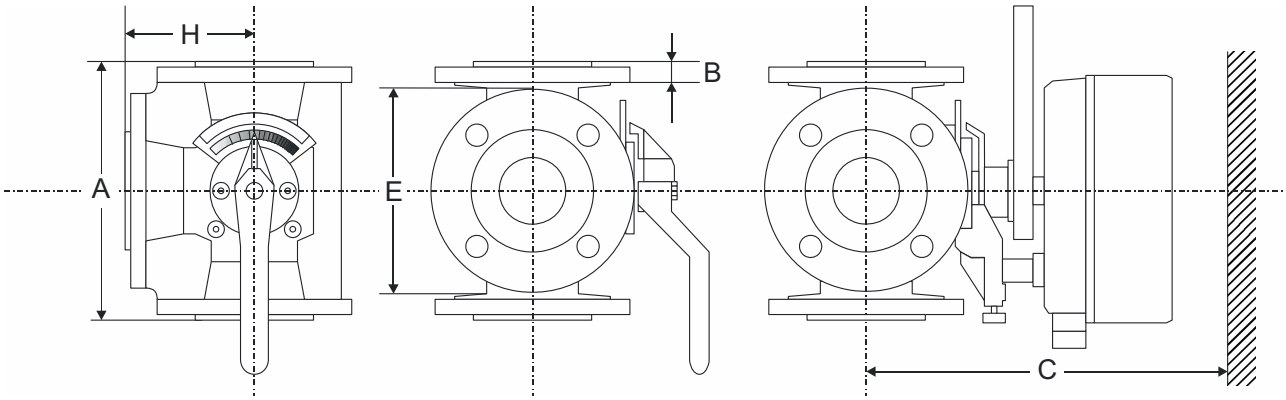

DN	A	B	C	E	H	Net weight	Item No.
20	140	15	230	90	70	3.5 kg	DR20GFLA
25	150	15	230	100	75	4.0 kg	DR25GFLA
32	160	17	240	120	80	6.6 kg	DR32GFLA
40	170	16	240	130	85	7.1 kg	DR40GFLA
50	190	16	250	140	95	9.8 kg	DR50GFLA
65	210	16	270	160	105	12.3 kg	DR65GFLA
80	250	18	270	190	125	21.4 kg	DR80GFLA
100	270	18	290	210	135	26.5 kg	DR100GFLA
125	310	20	320	240	155	42.0 kg	DR125GFLA
150	330	20	325	264	165	49.0 kg	DR150GFLA
200	390	22	365	320	195	78.0 kg	DR200GFLA1
200	390	22	365	320	195	78.0 kg	DR200GFLA

Note: All dimensions in mm unless stated otherwise.

Dimensions in combination with ZRxxxMA

Overview

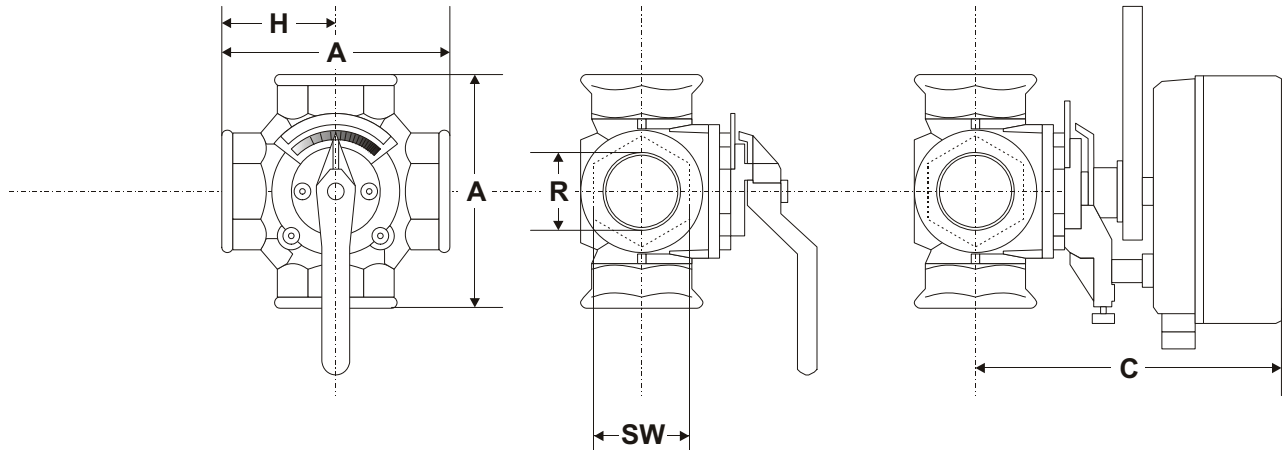

DN	A	C	SW	H	R	Net weight	Item No.
15	110	179	41	55	1/2"	2.4 kg	ZR15MA
20	110	179	46	55	3/4"	2.5 kg	ZR20MA
25	115	179	50	58	1"	2.6 kg	ZR25MA
32	140	188	60	70	1 1/4"	4.3 kg	ZR32MA
40	150	188	65	75	1 1/2"	4.5 kg	ZR40MA

Note: All dimensions in mm unless stated otherwise.

Dimensions in combination with ZRxxxFA

Overview

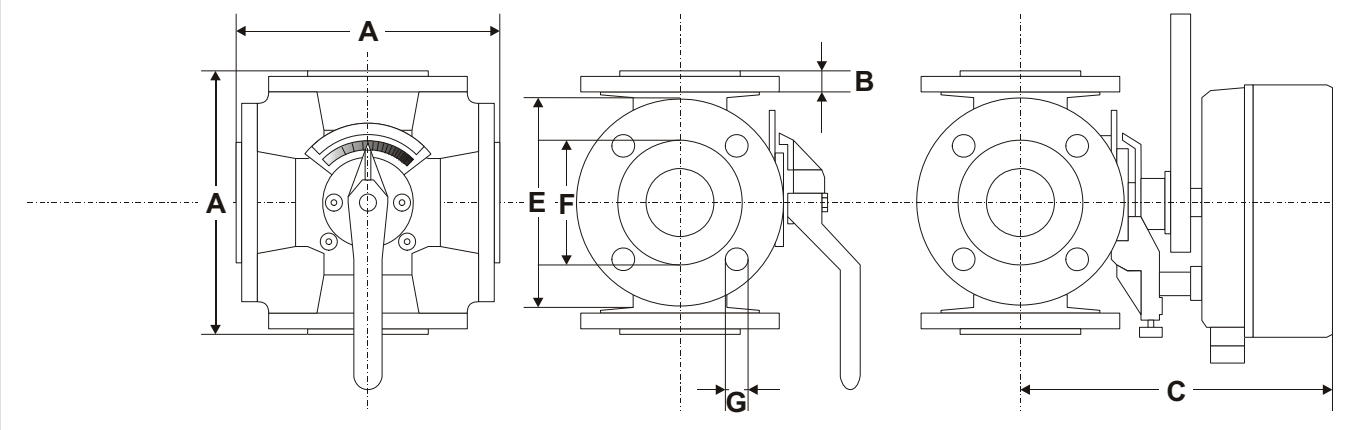

DN	A	B	C	E	F	G	Net weight	Item No.
25	150	15	179	100	60	4x11	4.8 kg	ZR25FA
32	160	16	188	120	70	4x14	7.6 kg	ZR32FA
40	170	16	188	130	80	4x14	8.5 kg	ZR40FA
50	190	16	202	140	90	4x14	11.0 kg	ZR50FA
65	210	16	219	160	110	4x14	14.4 kg	ZR65FA
80	250	18	219	190	128	4x18	24.3 kg	ZR80FA
100	270	18	240	210	148	4x18	32.9 kg	ZR100FA
125	310	18	267	240	178	8x18	49.0 kg	ZR125FA
150	330	20	274	265	202	8x18	57.0 kg	ZR150FA
200	390	22	314	320	258	8x18	84.0 kg	ZR200FA

Note: All dimensions in mm unless stated otherwise.

Dimensions in combination with DRU

Overview

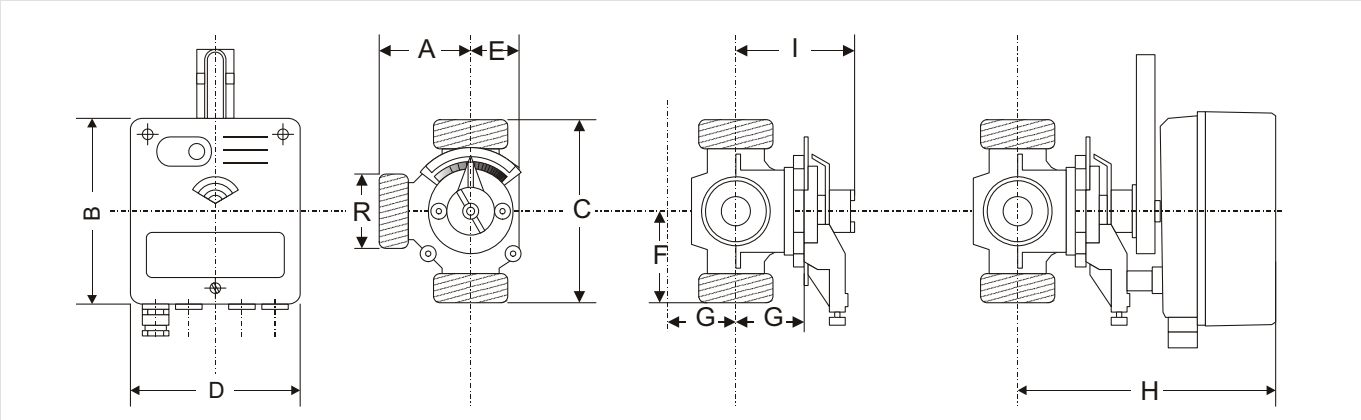

DN	A	B	C	D	E	F	G	H	I	R	Weight	Item No.
25	55	146	110	133	32	55	51	182	89	$1^1/_2$"	2.2	DRU25-2.5
25	55	146	110	133	32	55	51	182	89	$1^1/_2$"	2.2	DRU25-4.0
25	55	146	110	133	32	55	51	182	89	$1^1/_2$"	2.2	DRU25-6.3
25	55	146	110	133	32	55	51	182	89	$1^1/_2$"	2.2	DRU25-10
25	55	146	110	133	32	55	51	182	89	$1^1/_2$"	2.2	DRU25-16
32	70	146	140	133	44	70	59	200	99	2"	4.1	DRU32-10
32	70	146	140	133	44	70	59	200	99	2"	4.1	DRU32-16
32	70	146	140	133	44	70	59	200	99	2"	4.1	DRU32-25

Note: All dimensions in mm unless stated otherwise.

ORDERING INFORMATION

The following tables contain all the information you need to make an order of an item of your choice.
When ordering, please always state the type, the ordering or the part number.

Options

Nominal torque (Nm)	Runtime*	Supply voltage	Order number
10	1.5	230 V	M6061L1019
20	1.6		M6061L1027
30	2.3		M6061L1035
40	3.5		M6061L1043
10	1.5	24 V	M6061A1013
20	1.6		M6061A1021
30	2.3		M6061A1039
40	3.5		M6061A1047

Note: *Runtime defined for 50 Hz; in case of 60 Hz the runtime will be reduced by 20 %.

ACCESSORIES

	Description	Item No.
	Feedback potentiometer 10 kOhm	
	Suitable only for M6061L1035	VMP10-90
	Auxiliary switch package	
	Ready-to-mount assembly consisting of two switches (3A / 250 V AC) and two switching cams; max. one VMS2 per actuator.	VMS2

Manufactured for
and on behalf of

Pittway Sàrl, Z.A.,La Pièce 6
1180 Rolle, Switzerland

© 2023 Resideo Technologies, Inc. All rights reserved. Subject to change. EN0H-1725GE23 R1123