Braukmann
V5032

Kombi-2-plus

Manual double regulating balancing valve

APPLICATION

The V5032 Kombi-2-plus is a static, variable orifice seperate double regulating balancing valve for the return with additional shut-off function.

It is suitable for use in variable and constant flow systems to manually balance the flow and to set resistances to an equal level all over the system.

V5032 Kombi-2-plus is typically used for static balancing of fan coil units, air handling units, chilled ceilings and two-pipe heating systems. It can be installed on the flow or the return side, general installation behaviour is to install it on the return side.

SPECIAL FEATURES

- Manual balancing of flow rates
  - Precise presetting with numeric scale
  - Concealed presetting prevents unwanted operation
- Wide range of application
  - Sizes DN10 up to DN80
  - Versions for standard and low flow rates available
- Easy commissioning
  - Fast and safe measurement with SafeCon™ measuring connections – 6 times faster than standard Binder connections
  - DN size and settings readable on handwheel even with insulated valve
  - All functions located on one side for easier access and use
  - Optimal measuring in combination with BasicMes (VM242) - all flow values are already included in the measuring device
- Maintenance friendly
  - Insert fully interchangeable
  - Integrated shut-off function
  - Presetting is not changed during shut-off

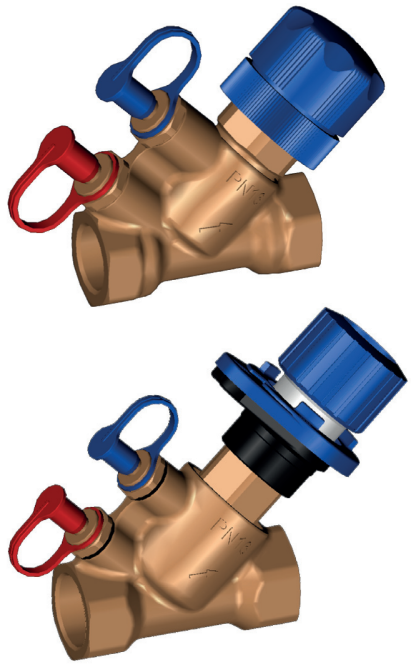

VALVE EFFICIENCY

	low				high
Energy efficiency	●	●	●	○	○
Commissioning effort	●	●	●	●	●
Calculation effort	●	●	●	●	○

TECHNICAL DATA

Media	
Medium:	Water or water-glycol mixture, quality to VDI 2035 (up to 50 % Glycol)
pH-value:	8...9.5
Pressure values	
Max. operating pressure:	max. 16 bar (232 psi)
Operating temperatures	
Water:	-20...130 °C (-4...266 °F)*
Water-glycol mixtures:	-20...110 °C (-4...230 °F)*
Connections/Sizes	
Nominal size:	DN10 - DN80
Specifications	
Housing:	DN10 - DN50: Dezincification-resistant brass DN65 - DN80: Red bronze
k_{VS} (c_{VS})-value:	See the flow data charts

Note: * for water-glycol mixtures to VDI 2035 max. temperature 110 °

Note: Water with temperature above 100 °C can only be used for heating systems

Note: To avoid stone deposit and corrosion the composition of the medium should conform with VDI-Guideline 2035

Note: Additives have to be suitable for EPDM sealings

Note: System has to be flushed thoroughly before initial operation. Valve inserts must be removed before flushing and all valve openings sealed by blind caps (see 'Accessories' above)

Note: Any complaints or costs resulting from non-compliance with above rules will not be accepted

Note: Please contact us if you should have any special requirements or needs

CONSTRUCTION

V5032BLF

Overview

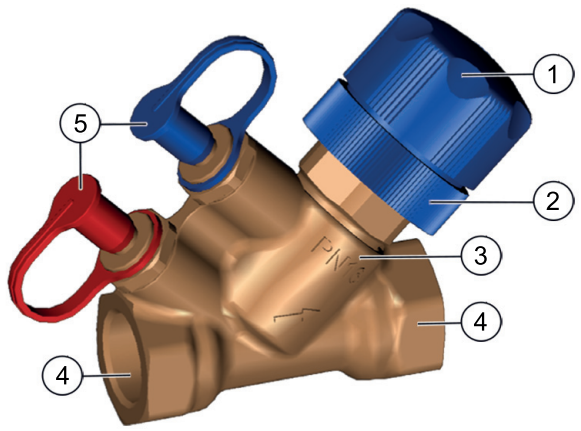

	Components	Materials
1	Handwheel for the shut-off function	Plastic
2	Concealed presetting with numeric display	Plastic
3	Valve housing with internal threads to DIN EN 10226-1 for threaded pipe and two G$^1/_4$" connections equipped with SafeCon™ pressure test valves	Dezincification-resistant brass
4	Two SafeCon™ measuring connections	Brass and plastic
5	SafeCon™ pressure test valve with colour marked protection cap	Rubber
	Not depicted components:	
	Valve insert	Brass
	O-rings and soft seals	EPDM
	Installation and setup instructions	Available from the Resideo online catalogue

V5032B

Overview		Components	Materials
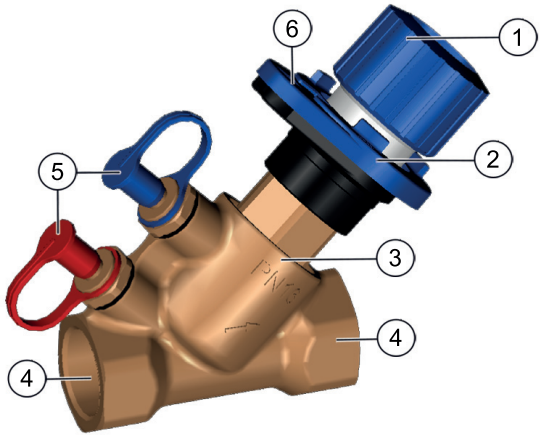	**1**	Handwheel with presetting dial and display	DN15 - DN50: Plastic DN65 - DN80: Steel
	2	Concealed presetting	Plastic
	3	Valve housing with internal threads to DIN EN 10226-1 for threaded pipe and two G¹/₄" connections equipped with SafeCon™ pressure test valves	DN15 - DN50: Dezincification-resistant brass DN65 - DN80: Red bronze
	4	Two SafeCon™ measuring connections	Brass and plastic
	5	SafeCon™ pressure test valve with colour marked protection cap	Rubber
	6	Numeric display of presetting	Plastic
		Not depicted components:	
		Valve insert with shut-off function	Brass
		Seat sealing	PTFE
		O-rings and soft seals	EPDM
		Installation and setup instructions	Available from the Resideo online catalogue

METHOD OF OPERATION

The V5032 valves are usually installed in the return pipeline.

Based on the required flow rate the valve is preset to a certain value by turning the presetting clockwise (increasing the presetting) or anticlockwise (decreasing the presetting). Required presetting value can be determined by using tables further below, by using a sizing tool, by measuring or directly from design documentation. The required flow at full load is normally calculated in advance by a consultant or similar specialist and must be known for system balancing.

Valve Identification

Each valve is marked as follows:

- OS - Number
- DN size
- PN rating
- Flow arrows
- Serial number/date code

TECHNICAL CHARACTERISTICS

Correction Factor f

When the density σ is expressed in t/m³ instead of kg/m³ the correction factor f is the result. The correction factor f can be used to recalculate kv-value, pressure drop and flow:

$$kv_{Medium} = kv_0 \times \frac{1}{\sqrt{f}} \qquad \Delta p_{Medium} = \Delta p_0 \times f \qquad m_{Medium} = m_0 \times \frac{1}{\sqrt{f}}$$

Influence of Coolants on Flow Values

The flow through a valve is defined by the kv-value. The kv-value is the flow m through a valve in [m³/h] at a differential pressure of 1 bar (14.5 psi) and is only valid for fluids with a density of σ0 = 1000 kg/m³. This condition is met by water at a temperature of 20°C (68°F). For fluids with another density the following formula can be applied:

$$kv_{Medium} = \frac{m}{\sqrt{\Delta p}} \times \frac{\sqrt{\rho_{Medium}}}{\sqrt{\rho_0}}$$

Flow Data V5032B, DN10

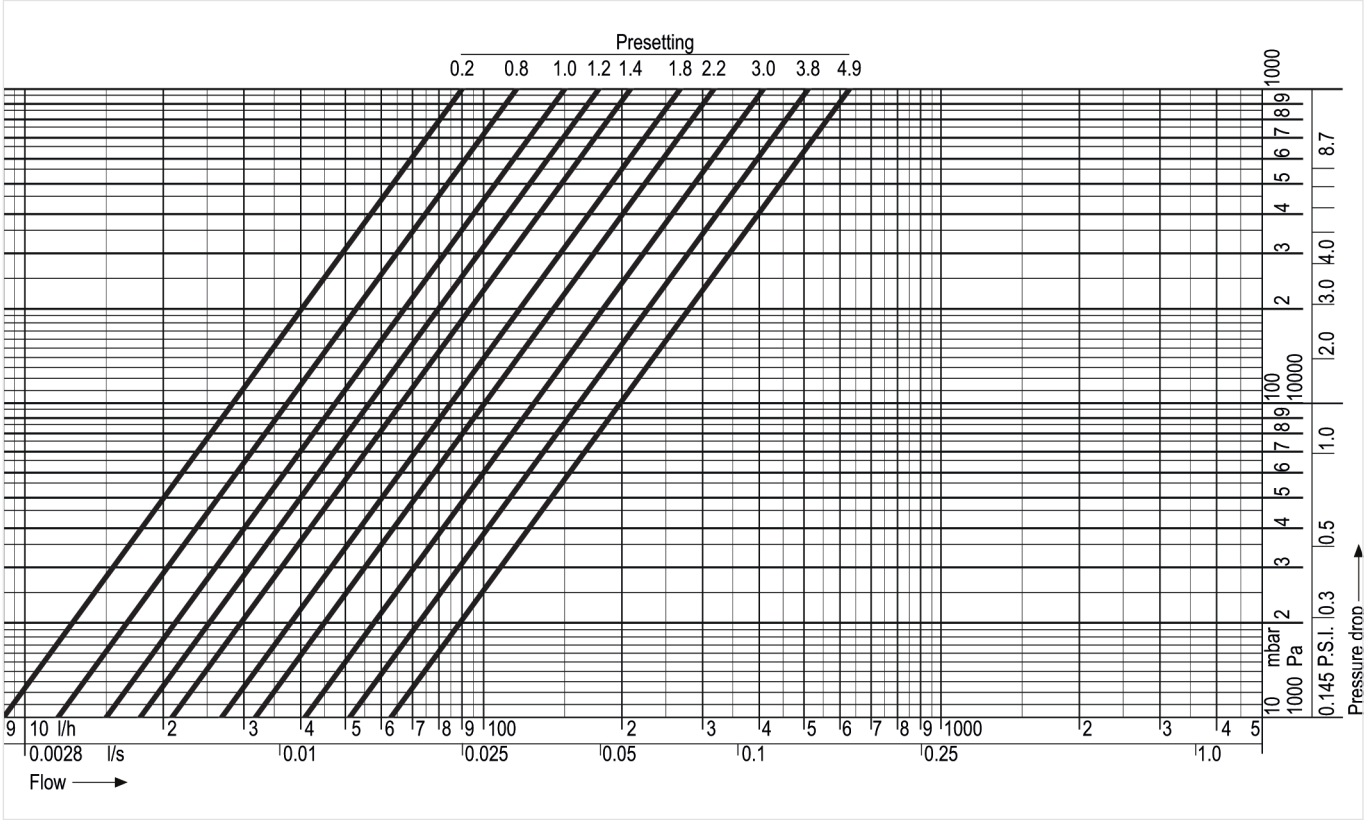

Presetting values

Setting:	0.2	0.3	0.4	0.5	0.6	0.7	0.8	0.9	1.0
k_v-value:	0.09	0.099	0.099	0.101	0.103	0.109	0.119	0.134	0.15
cv-value:	0.09	0.099	0.099	0.101	0.103	0.109	0.119	0.134	0.15

Setting:	1.2	1.4	1.6	1.8	2.0	2.2	2.4	2.6	2.8
k_v-value:	0.182	0.215	0.243	0.269	0.295	0.319	0.344	0.369	0.392
cv-value:	0.184	0.217	0.246	0.273	0.302	0.327	0.355	0.382	0.409

Setting:	3.0	3.2	3.4	3.6	3.8	4.0	4.2	4.4	4.6
k_v-value:	0.414	0.435	0.458	0.486	0.517	0.554	0.589	0.619	0.631
cv-value:	0.434	0.461	0.488	0.524	0.563	0.614	0.668	0.714	0.733

Setting:	4.8	4.9 = open
k_v-value:	0.632	k_{vs} = 0.631
cv-value:	0.732	c_{vs} = 0.729

Flow Data V5032B, DN15

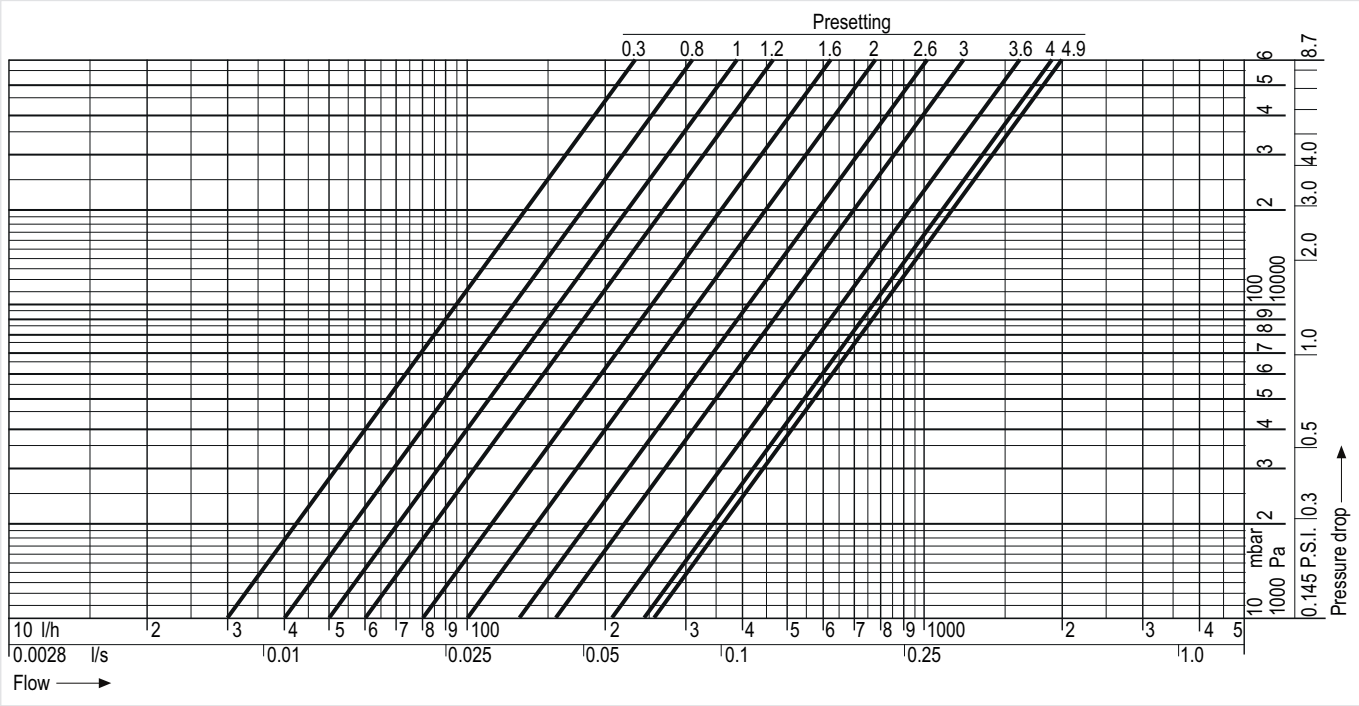

Presetting values

Setting:	**0.3**	**0.4**	**0.6**	**0.8**	**1**	**1.2**	**1.4**	**1.6**	**1.8**
k_v-value:	0.3	0.3	0.3	0.4	0.5	0.6	0.7	0.8	0.9
cv-value:	0.3	0.3	0.3	0.5	0.6	0.7	0.8	0.9	1.0

Setting:	**2**	**2.2**	**2.4**	**2.6**	**2.8**	**3**	**3.2**	**3.4**	**3.6**
k_v-value:	1.0	1.1	1.2	1.3	1.5	1.6	1.8	2.0	2.1
cv-value:	1.2	1.3	1.4	1.5	1.7	1.9	2.1	2.3	2.4

Setting:	**3.8**	**4.0**	**4.2**	**4.4**	**4.6**	**4.8**	**4.9 = open**
k_v-value:	2.3	2.4	2.4	2.5	2.5	2.6	k_{vs} = 2.6
cv-value:	2.7	2.8	2.8	2.9	2.9	3.0	c_{vs} = 3.0

Flow Data V5032BLF, DN15

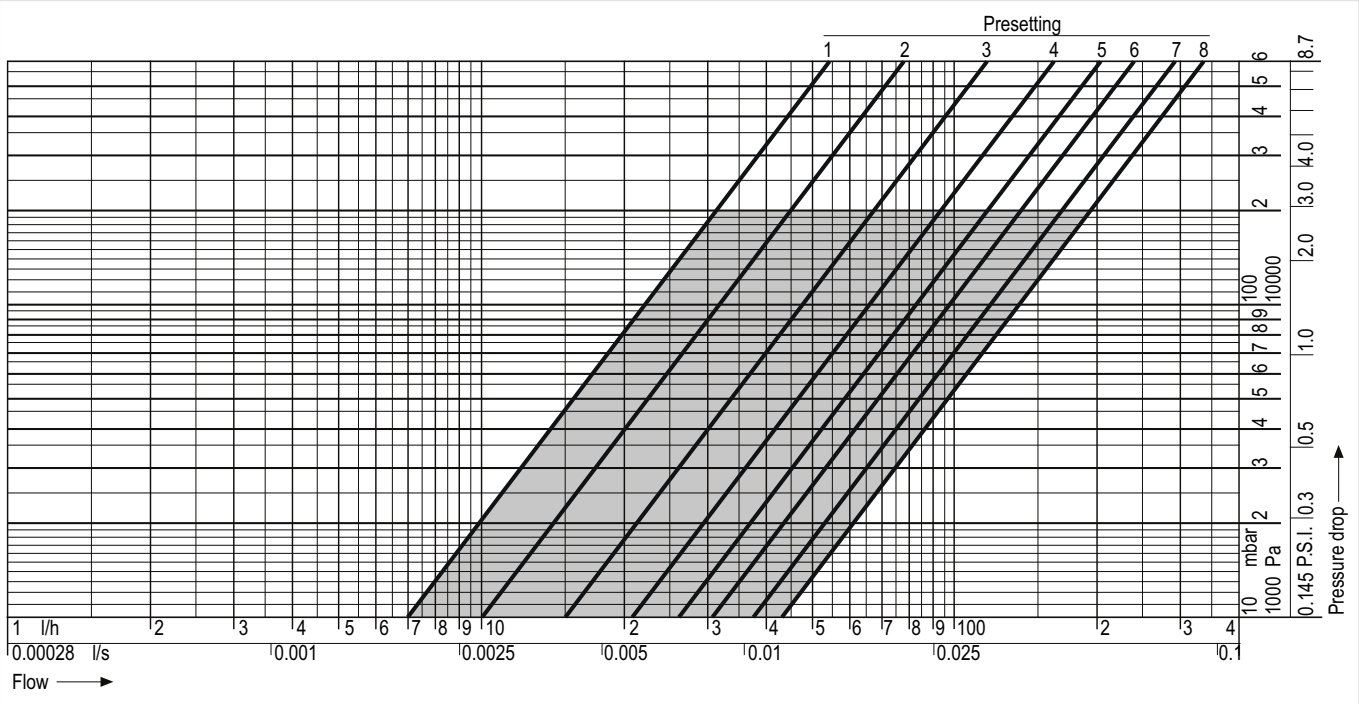

Note: Recommended range of application when used with actuator. MT4, M100 range, M4410E1510, M4410K1515 and M7410A1001

Presetting values

Setting:	1	2	3	4	5	6	7	8
k_v-value:	0.07	0.10	0.15	0.21	0.26	0.31	0.37	0.43
cv-value:	0.06	0.09	0.13	0.18	0.22	0.27	0.32	0.37

Flow Data V5032B, DN20

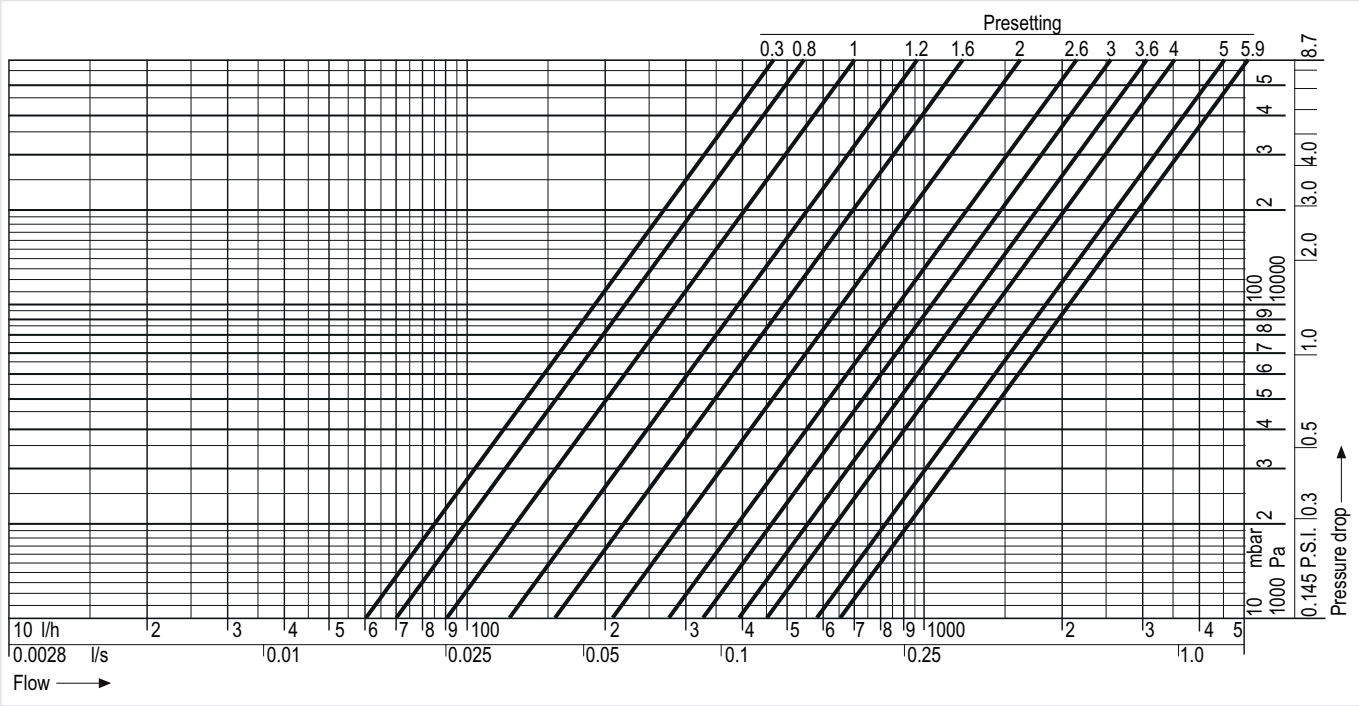

Presetting values

Setting:	**0.3**	**0.4**	**0.6**	**0.8**	**1.0**	**1.2**	**1.4**	**1.6**	**1.8**
k_v-value:	0.6	0.6	0.6	0.7	0.9	1.2	1.4	1.6	1.8
cv-value:	0.7	0.7	0.7	0.8	1.1	1.4	1.6	1.9	2.1

Setting:	**2.0**	**2.2**	**2.4**	**2.6**	**2.8**	**3.0**	**3.2**	**3.4**	**3.6**
k_v-value:	2.1	2.3	2.5	2.7	3.0	3.2	3.4	3.7	3.9
cv-value:	2.4	2.6	2.9	3.2	3.4	3.7	4.0	4.2	4.6

Setting:	**3.8**	**4.0**	**4.2**	**4.4**	**4.6**	**4.8**	**5.0**	**5.2**	**5.4**
k_v-value:	4.2	4.5	4.8	5.1	5.3	5.5	5.7	5.9	6.1
cv-value:	4.9	5.3	5.6	5.9	6.2	6.4	6.7	6.9	7.1

Setting:	**5.6**	**5.8**	**5.9 = open**
k_v-value:	6.3	6.5	k_{vs} = 6.5
cv-value:	7.3	7.5	c_{vs} = 7.6

Flow Data V5032B, DN25

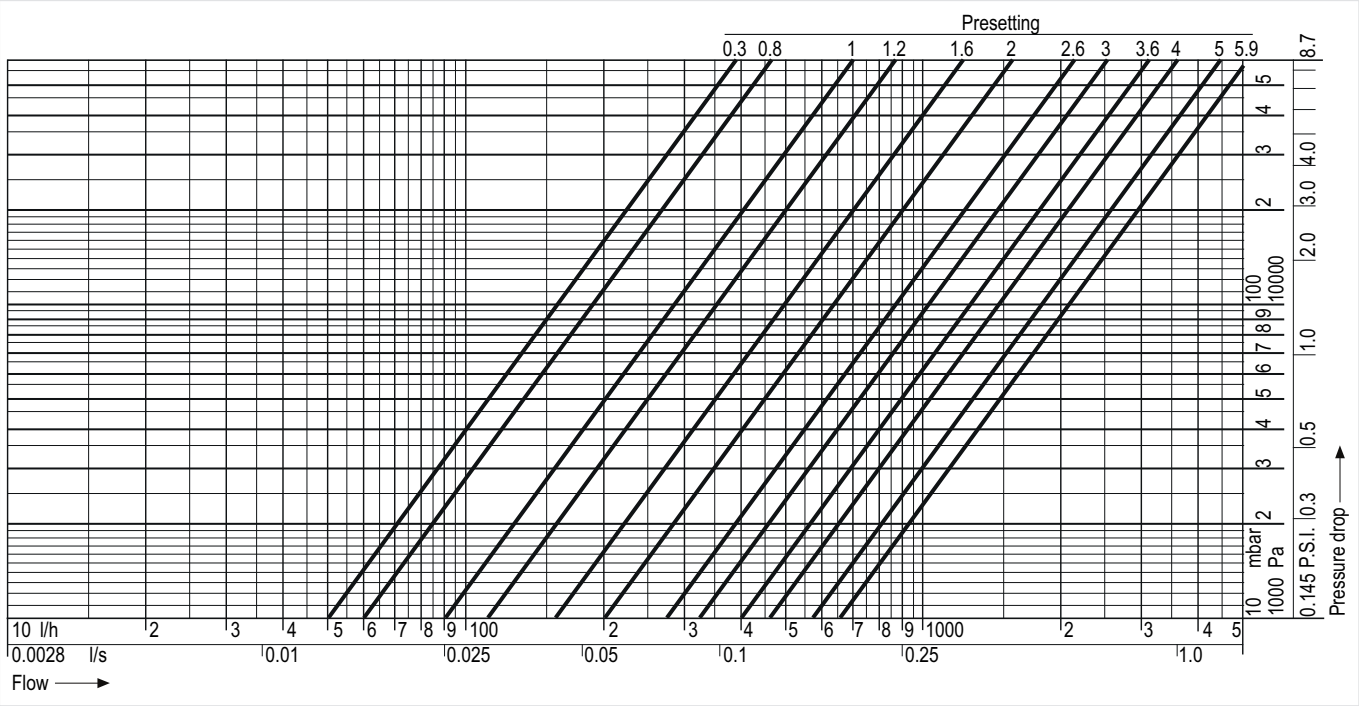

Presetting values

Setting:	**0.3**	**0.4**	**0.6**	**0.8**	**1.0**	**1.2**	**1.4**	**1.6**	**1.8**
k_v-value:	0.5	0.5	0.5	0.6	0.9	1.1	1.3	1.6	1.8
cv-value:	0.6	0.6	0.6	0.7	1.0	1.3	1.5	1.8	2.1

Setting:	**2.0**	**2.2**	**2.4**	**2.6**	**2.8**	**3.0**	**3.2**	**3.4**	**3.6**
k_v-value:	2.0	2.2	2.5	2.7	3.0	3.2	3.4	3.7	4.0
cv-value:	2.3	2.6	2.9	3.1	3.4	3.7	4.0	4.3	4.6

Setting:	**3.8**	**4.0**	**4.2**	**4.4**	**4.6**	**4.8**	**5.0**	**5.2**	**5.4**
k_v-value:	4.3	4.6	4.9	5.2	5.4	5.5	5.7	5.8	6.0
cv-value:	5.0	5.4	5.7	6.0	6.3	6.4	6.6	6.8	6.9

Setting:	**5.6**	**5.8**	**5.9 = open**
k_v-value:	6.2	6.5	k_{vs} = 6.6
cv-value:	7.2	7.5	c_{vs} = 7.6

Flow Data V5032B, DN32

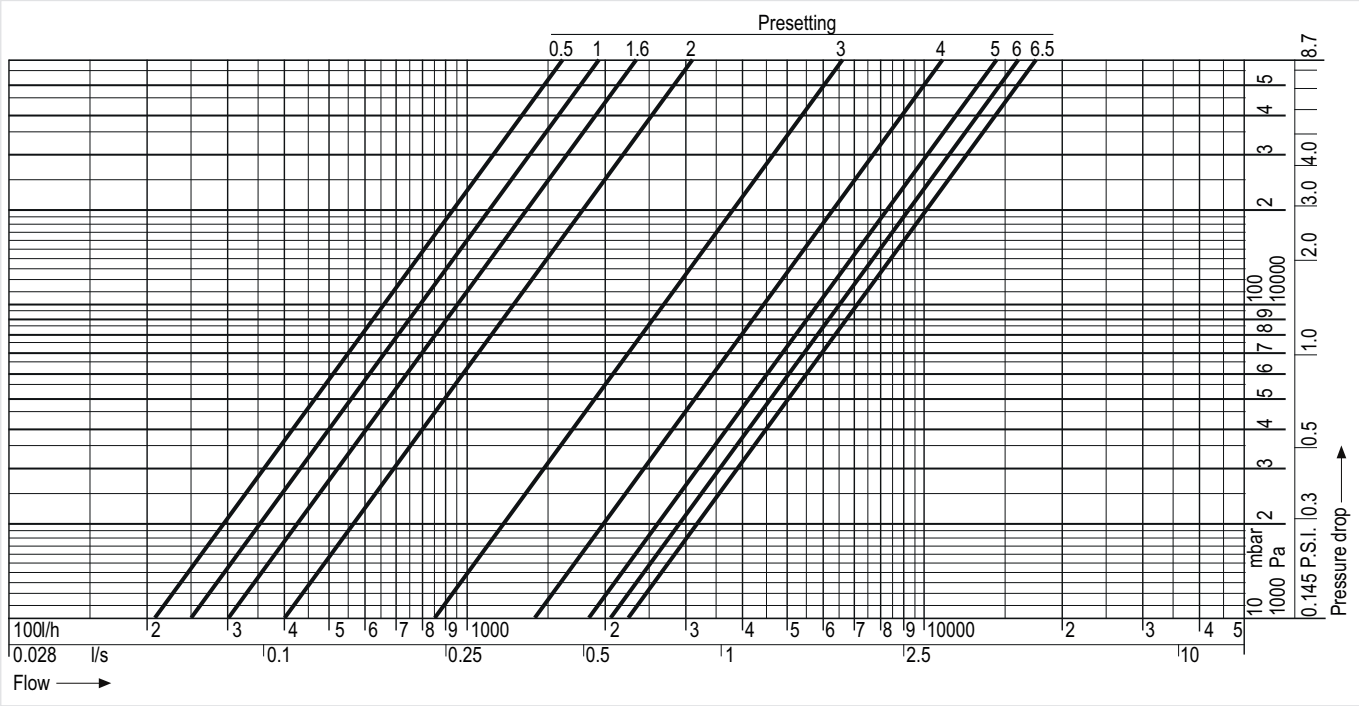

Presetting values

Setting:	**0.5**	**1.0**	**1.2**	**1.4**	**1.5**	**1.6**	**1.8**	**2.0**	**2.2**
k_v-value:	2.1	2.5	2.7	2.8	2.9	3.0	3.4	4.0	4.8
cv-value:	2.5	2.9	3.1	3.3	3.4	3.5	4.0	4.6	5.6

Setting:	**2.4**	**2.6**	**2.8**	**3.0**	**3.2**	**3.4**	**3.6**	**3.8**	**4.0**
k_v-value:	5.7	6.6	7.5	8.5	9.6	10.9	12.0	13.1	14.1
cv-value:	6.6	7.6	8.7	9.9	11.2	12.7	14.0	15.2	16.5

Setting:	**4.2**	**4.4**	**4.6**	**4.8**	**5.0**	**5.2**	**5.4**	**5.6**	**5.8**
k_v-value:	15.3	16.3	17.2	17.9	18.5	19.1	19.4	19.7	20.0
cv-value:	17.8	19.0	20.0	20.8	21.5	22.2	22.6	22.9	23.3

Setting:	**6.0**	**6.2**	**6.4**	**6.5 = open**
k_v-value:	20.5	21.0	21.6	k_{vs} = 21.9
cv-value:	23.9	24.4	25.1	c_{vs} = 25.5

Flow Data V5032B, DN40

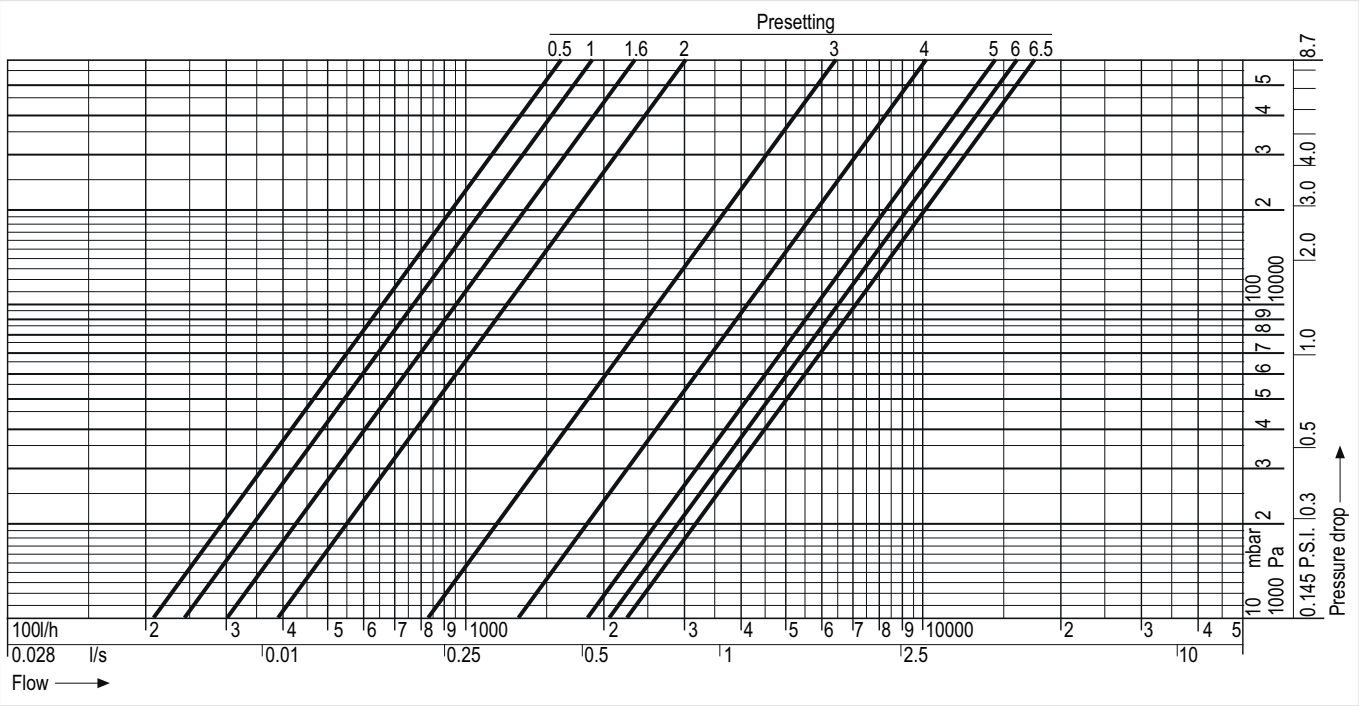

Presetting values

Setting:	**0.5**	**1.0**	**1.2**	**1.4**	**1.5**	**1.6**	**1.8**	**2.0**	**2.2**
k_v-value:	2.1	2.4	2.6	2.8	2.9	3.0	3.3	3.9	4.6
cv-value:	2.4	2.8	3.0	3.3	3.4	3.5	3.9	4.5	5.4

Setting:	**2.4**	**2.6**	**2.8**	**3.0**	**3.2**	**3.4**	**3.6**	**3.8**	**4.0**
k_v-value:	5.4	6.3	7.3	8.3	9.3	10.4	11.5	12.6	13.7
cv-value:	6.3	7.3	8.5	9.6	10.9	12.1	13.3	14.6	16.0

Setting:	**4.2**	**4.4**	**4.6**	**4.8**	**5.0**	**5.2**	**5.4**	**5.6**	**5.8**
k_v-value:	14.8	15.9	16.8	17.5	18.2	18.6	18.9	19.1	19.6
cv-value:	17.2	18.5	19.5	20.3	21.1	21.6	22.0	22.2	22.8

Setting:	**6.0**	**6.2**	**6.4**	**6.5 = open**
k_v-value:	20.1	20.6	21.1	k_{vs} = 21.2
cv-value:	23.4	23.9	24.5	c_{vs} = 24.6

Flow Data V5032B, DN50

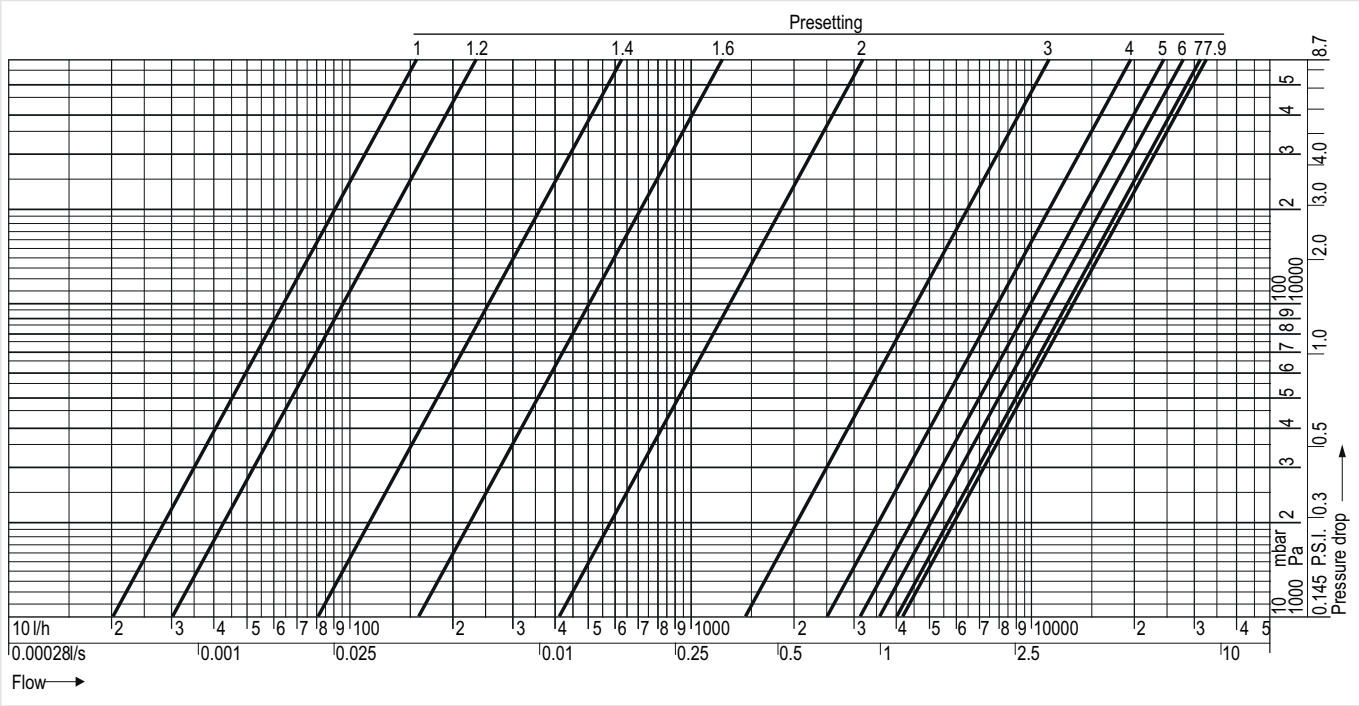

Presetting values

Setting:	**1.0**	**1.2**	**1.4**	**1.6**	**1.8**	**2.0**	**2.2**	**2.4**	**2.6**
k_v-value:	0.2	0.3	0.8	1.6	2.7	4.1	5.7	7.6	9.6
cv-value:	0.2	0.3	0.9	1.9	3.2	4.8	6.7	8.8	11.2

Setting:	**2.8**	**3.0**	**3.2**	**3.4**	**3.6**	**3.8**	**4.0**	**4.2**	**4.4**
k_v-value:	11.9	14.2	16.6	19.2	21.5	23.7	25.5	26.6	27.7
cv-value:	13.8	16.5	19.3	22.3	25.0	27.6	29.7	30.9	32.2

Setting:	**4.6**	**4.8**	**5.0**	**5.2**	**5.4**	**5.6**	**5.8**	**6.0**	**6.2**
k_v-value:	28.9	29.9	31.0	32.1	32.8	34.0	34.9	36.0	36.9
cv-value:	33.6	34.8	36.1	37.3	38.2	39.5	40.6	41.8	42.9

Setting:	**6.4**	**6.6**	**6.8**	**7.0**	**7.2**	**7.4**	**7.6**	**7.9 = open**
k_v-value:	37.9	38.8	39.7	40.6	41.0	41.5	41.6	k_{vs} = 41.5
cv-value:	44.1	45.1	46.1	47.2	47.7	48.3	48.4	c_{vs} = 48.3

Flow Data V5032B, DN65

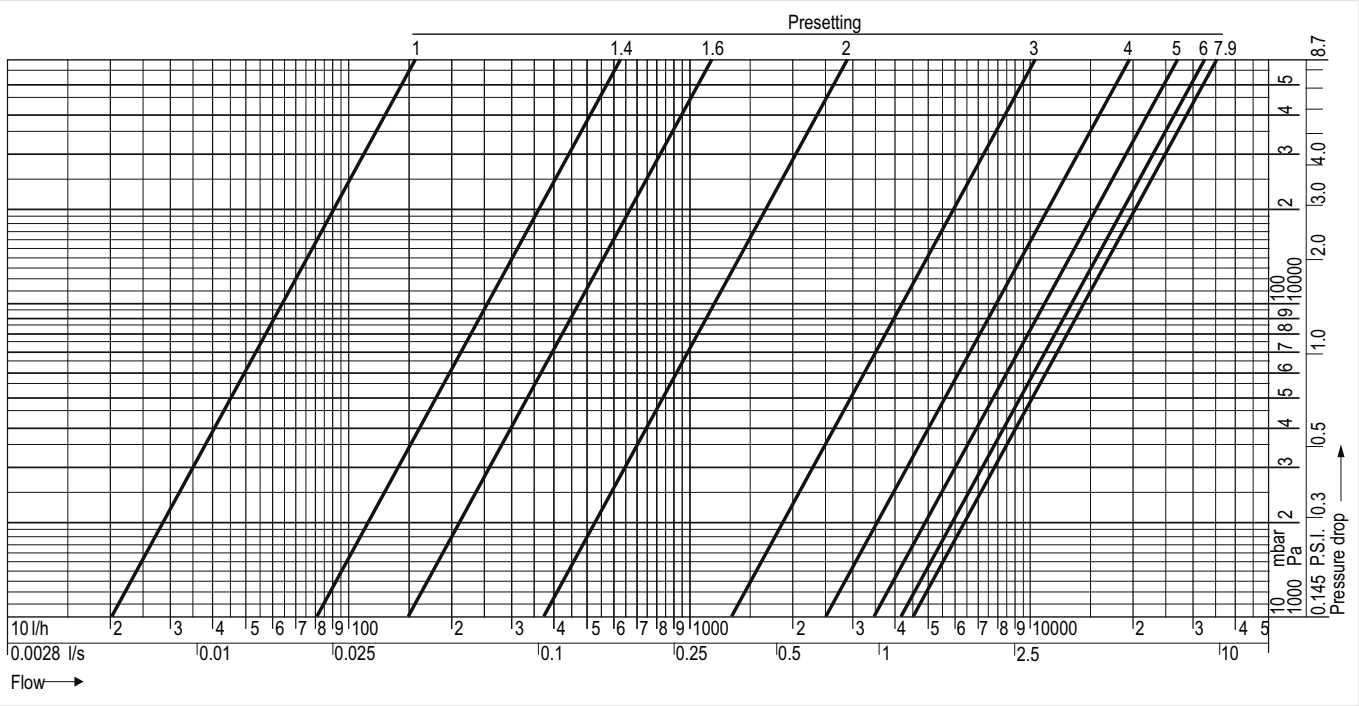

Presetting values

Setting:	**1.0**	**1.2**	**1.4**	**1.6**	**1.8**	**2.0**	**2.2**	**2.4**	**2.6**
k_v-value:	0.2	0.2	0.8	1.5	2.5	3.7	5.2	7.0	9.0
cv-value:	0.3	0.2	0.9	1.8	2.9	4.4	6.1	8.1	10.4

Setting:	**2.8**	**3.0**	**3.2**	**3.4**	**3.6**	**3.8**	**4.0**	**4.2**	**4.4**
k_v-value:	11.1	13.4	15.8	18.1	20.5	22.9	25.1	27.3	29.3
cv-value:	12.9	15.6	18.3	21.1	23.9	26.6	29.2	31.7	34.1

Setting:	**4.6**	**4.8**	**5.0**	**5.2**	**5.4**	**5.6**	**5.8**	**6.0**	**6.2**
k_v-value:	31.3	33.1	34.8	36.4	37.9	39.2	40.4	41.4	42.3
cv-value:	36.4	38.5	40.5	42.4	44.1	45.6	46.9	48.1	49.1

Setting:	**6.4**	**6.6**	**6.8**	**7.0**	**7.2**	**7.4**	**7.6**	**7.9 = open**
k_v-value:	43.0	43.6	44.0	44.4	44.7	44.9	45.1	k_{vs} = 45.3
cv-value:	50.0	50.7	51.2	51.7	52.0	52.2	52.4	c_{vs} = 52.6

Flow Data V5032B, DN80

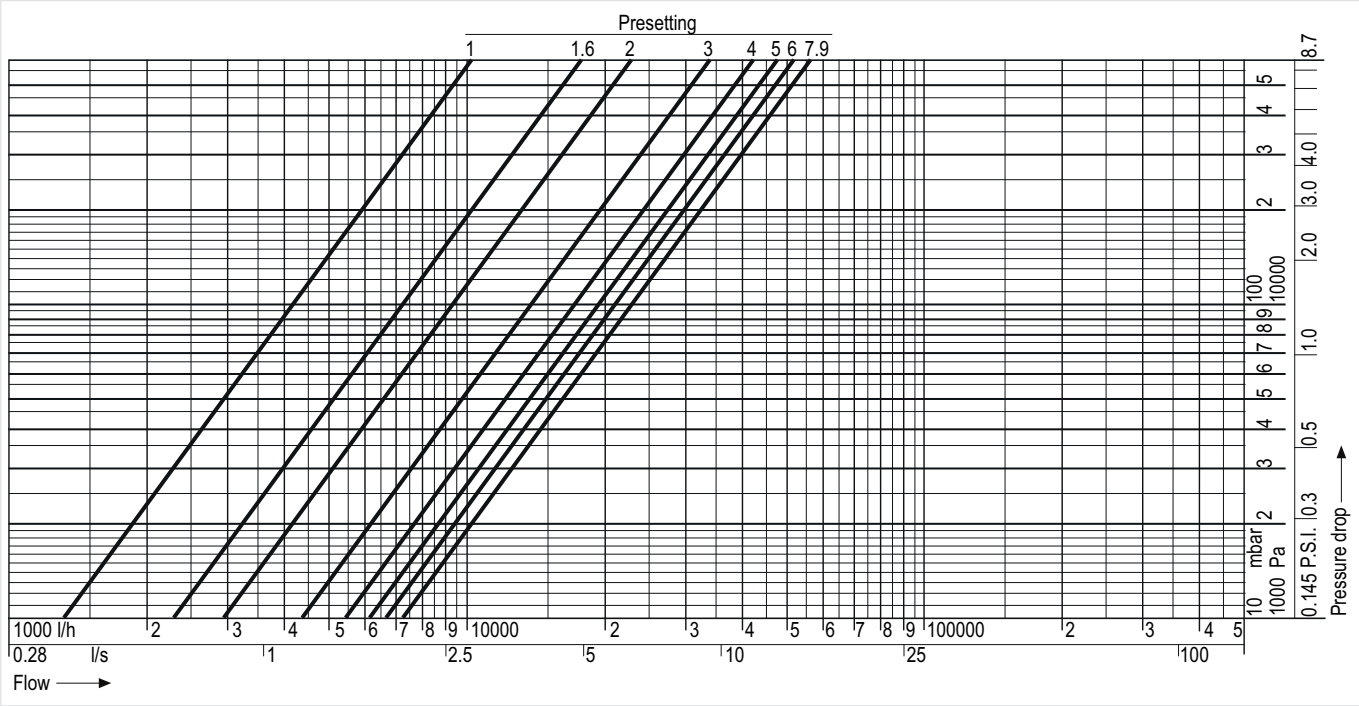

Presetting values

Setting:	**1.0**	**1.2**	**1.4**	**1.6**	**1.8**	**2.0**	**2.2**	**2.4**	**2.6**
k_v-value:	13.9	16.9	20.0	23.1	26.2	29.3	32.3	35.3	38.1
cv-value:	16.2	19.7	23.2	26.8	30.4	34.0	37.6	41.0	44.3

Setting:	**2.8**	**3.0**	**3.2**	**3.4**	**3.6**	**3.8**	**4.0**	**4.2**	**4.4**
k_v-value:	40.8	43.4	45.9	48.2	50.4	52.4	54.3	56.0	57.6
cv-value:	47.5	50.5	53.4	56.1	58.6	60.9	63.1	65.1	67.0

Setting:	**4.6**	**4.8**	**5.0**	**5.2**	**5.4**	**5.6**	**5.8**	**6.0**	**6.2**
k_v-value:	59.1	60.5	61.8	62.9	64.0	65.0	65.9	66.8	67.6
cv-value:	68.7	70.4	71.8	73.2	74.4	75.6	76.7	77.7	78.6

Setting:	**6.4**	**6.6**	**6.8**	**7.0**	**7.2**	**7.4**	**7.6**	**7.9 = open**
k_v-value:	68.3	69.0	69.7	70.3	71.0	71.6	72.1	k_{vs} = 73.0
cv-value:	79.5	80.3	81.1	81.8	82.5	83.2	83.9	c_{vs} = 84.9

KV-VALUES FOR MEASURING WITH NON-RESIDEO DEVICES

V5032B (DN10)

Setting:	0.2	0.3	0.4	0.5	0.6	0.7	0.8	0.9	1.0
k_v-value:	0.09	0.099	0.099	0.101	0.103	0.109	0.119	0.134	0.15
cv-value:	0.09	0.099	0.099	0.101	0.103	0.109	0.119	0.134	0.15

Setting:	1.2	1.4	1.6	1.8	2.0	2.2	2.4	2.6	2.8
k_v-value:	0.182	0.215	0.243	0.269	0.295	0.319	0.344	0.369	0.392
cv-value:	0.184	0.217	0.246	0.273	0.302	0.327	0.355	0.382	0.409

Setting:	3.0	3.2	3.4	3.6	3.8	4.0	4.2	4.4	4.6
k_v-value:	0.414	0.435	0.458	0.486	0.517	0.554	0.589	0.619	0.631
cv-value:	0.434	0.461	0.488	0.524	0.563	0.614	0.668	0.714	0.733

Setting:	4.8	4.9 = open
k_v-value:	0.632	k_{vs} = 0.631
cv-value:	0.732	c_{vs} = 0.729

V5032B (DN15)

Setting:	0.3	0.4	0.6	0.8	1.0	1.2	1.4	1.6	1.8
k_v-value:	0.3	0.3	0.3	0.4	0.5	0.6	0.7	0.8	1.0
cv-value:	0.3	0.3	0.3	0.5	0.6	0.7	0.8	0.9	1.2

Setting:	2.0	2.2	2.4	2.6	2.8	3.0	3.2	3.4	3.6
k_v-value:	1.1	1.2	1.4	1.5	1.7	1.9	2.1	2.4	2.7
cv-value:	1.3	1.4	1.6	1.7	2.0	2.2	2.4	2.8	3.1

Setting:	3.8	4.0	4.2	4.4	4.6	4.8	4.9 = open
k_v-value:	2.9	3.2	3.4	3.6	3.8	4.1	k_{vs} = 4.3
cv-value:	3.4	3.7	4.0	4.2	4.4	4.8	c_{vs} = 5.0

V5032BLF (DN15)

Setting:	1	2	3	4	5	6	7	8
k_v-value:	0.07	0.10	0.15	0.21	0.26	0.31	0.37	0.43
cv-value:	0.06	0.09	0.13	0.18	0.22	0.27	0.32	0.37

V5032B (DN20)

Setting:	0.3	0.4	0.6	0.8	1.0	1.2	1.4	1.6	1.8
k_v-value:	0.6	0.6	0.6	0.7	1.0	1.2	1.5	1.7	2.0
cv-value:	0.7	0.7	0.7	0.9	1.1	1.4	1.7	2.0	2.3

Setting:	2.0	2.2	2.4	2.6	2.8	3.0	3.2	3.4	3.6
k_v-value:	2.3	2.5	2.8	3.1	3.3	3.6	3.8	4.1	4.4
cv-value:	2.6	2.9	3.2	3.6	3.9	4.2	4.4	4.7	5.1

Setting:	3.8	4.0	4.2	4.4	4.6	4.8	5.0	5.2	5.4
k_v-value:	4.8	5.2	5.6	5.9	6.3	6.6	6.9	7.2	7.6
cv-value:	5.6	6.1	6.5	6.9	7.4	7.7	8.0	8.4	8.8

Setting:	5.6	5.8	5.9 = open
k_v-value:	7.9	8.2	k_{vs} = 8.4
cv-value:	9.2	9.6	c_{vs} = 9.8

V5032B (DN25)

Setting:	0.3	0.4	0.6	0.8	1.0	1.2	1.4	1.6	1.8
k_v-value:	0.5	0.6	0.6	0.6	0.9	1.1	1.4	1.7	1.9
cv-value:	0.6	0.8	0.8	0.8	1.1	1.3	1.6	1.9	2.2

Setting:	2.0	2.2	2.4	2.6	2.8	3.0	3.2	3.4	3.6
k_v-value:	2.2	2.4	2.7	2.9	3.2	3.5	3.7	3.9	4.2
cv-value:	2.5	2.8	3.1	3.4	3.7	4.0	4.3	4.5	4.9

Setting:	3.8	4.0	4.2	4.4	4.6	4.8	5.0	5.2	5.4
k_v-value:	4.4	4.7	5.1	5.5	5.8	6.0	6.2	6.4	6.5
cv-value:	5.1	5.5	6.0	6.4	6.8	7.0	7.2	7.4	7.5

Setting:	5.6	5.8	5.9 = open
k_v-value:	6.8	7.3	k_{vs} = 7.4
cv-value:	7.9	8.4	c_{vs} = 8.6

V5032B (DN32)

Setting:	0.5	1.0	1.2	1.4	1.5	1.6	1.8	2.0	2.2
k_v-value:	2.1	2.5	2.7	2.9	3.0	3.1	3.4	4.1	4.9
cv-value:	2.5	2.9	3.1	3.4	3.5	3.6	4.0	4.8	5.7

Setting:	2.4	2.6	2.8	3.0	3.2	3.4	3.6	3.8	4.0
k_v-value:	5.8	6.7	7.6	8.7	9.9	11.4	13.2	15.2	17.3
cv-value:	6.7	7.8	8.9	10.1	11.5	13.3	15.3	17.7	20.1

Setting:	4.2	4.4	4.6	4.8	5.0	5.2	5.4	5.6	5.8
k_v-value:	19.4	21.3	22.5	23.1	22.6	22.0	21.1	21.0	20.1
cv-value:	22.5	24.8	26.2	26.9	26.3	25.5	24.6	24.5	23.7

Setting:	6.0	6.2	6.4	6.5 = open
k_v-value:	20.7	21.3	22.2	k_{vs} = 23.1
cv-value:	24.0	24.7	25.8	c_{vs} = 26.8

V5032B (DN40)

Setting:	0.5	1.0	1.2	1.4	1.5	1.6	1.8	2.0	2.2
k_v-value:	2.1	2.4	2.6	2.8	2.9	3.0	3.4	3.9	4.7
cv-value:	2.4	2.8	3.1	3.3	3.4	3.5	3.9	4.6	5.4

Setting:	2.4	2.6	2.8	3.0	3.2	3.4	3.6	3.8	4.0
k_v-value:	5.5	6.3	7.3	8.3	9.4	10.6	12.1	14.0	16.5
cv-value:	6.4	7.4	8.4	9.6	10.9	12.3	14.0	16.3	19.1

Setting:	4.2	4.4	4.6	4.8	5.0	5.2	5.4	5.6	5.8
k_v-value:	19.1	21.2	22.7	23.3	23.3	22.7	21.5	20.0	19.6
cv-value:	22.2	24.6	26.3	27.1	27.0	26.4	25.0	23.3	22.8

Setting:	6.0	6.2	6.4	6.5 = open
k_v-value:	19.8	20.4	21.3	k_{vs} = 21.4
cv-value:	23.0	23.7	24.8	c_{vs} = 24.9

V5032B (DN50)

Setting:	1.0	1.2	1.4	1.6	1.8	2.0	2.2	2.4	2.6
k_v-value:	0.2	0.3	0.8	1.6	2.8	4.3	6.0	8.2	10.7
cv-value:	0.2	0.3	0.9	1.9	3.2	4.9	7.0	9.5	12.4

Setting:	2.8	3.0	3.2	3.4	3.6	3.8	4.0	4.2	4.4
k_v-value:	13.6	17.1	20.8	24.8	28.8	31.6	33.0	33.2	33.3
cv-value:	15.8	19.8	24.2	28.9	33.5	36.7	38.4	38.6	38.7

Setting:	4.6	4.8	5.0	5.2	5.4	5.6	5.8	6.0	6.2
k_v-value:	33.3	33.9	34.9	35.8	36.4	38.0	39.8	42.1	44.2
cv-value:	38.7	39.4	40.6	41.7	42.3	44.1	46.2	48.9	51.4

Setting:	6.4	6.6	6.8	7.0	7.2	7.4	7.6	7.9 = open
k_v-value:	45.7	47.1	48.7	50.4	51.8	50.7	48.8	k_{vs} = 46.9
cv-value:	53.2	54.7	56.6	58.6	60.2	59.0	56.7	c_{vs} = 54.6

V5032B (DN65)

Setting:	1.0	1.2	1.4	1.6	1.8	2.0	2.2	2.4	2.6
k_v-value:	0.3	0.5	1.1	1.6	2.4	3.5	4.9	6.6	8.7
cv-value:	0.4	0.6	1.2	1.9	2.8	4.0	5.7	7.7	10.1

Setting:	2.8	3.0	3.2	3.4	3.6	3.8	4.0	4.2	4.4
k_v-value:	11.0	13.4	15.8	18.2	20.5	22.6	24.7	26.7	28.8
cv-value:	12.8	15.6	18.4	21.1	23.8	26.3	28.7	31.1	33.4

Setting:	4.6	4.8	5.0	5.2	5.4	5.6	5.8	6.0	6.2
k_v-value:	30.8	33.0	35.2	37.5	39.7	41.7	43.3	44.6	45.5
cv-value:	35.8	38.4	41.0	43.6	46.2	48.4	50.4	51.8	52.9

Setting:	6.4	6.6	6.8	7.0	7.2	7.4	7.6	7.9 = open
k_v-value:	46.2	46.6	46.9	47.1	47.2	47.3	47.3	k_{vs} = 47.4
cv-value:	53.7	54.2	54.5	54.7	54.9	55.0	55.0	c_{vs} = 55.1

V5032B (DN80)

Setting:	1.0	1.2	1.4	1.6	1.8	2.0	2.2	2.4	2.6
k_v-value:	13.9	16.7	19.8	13.0	26.2	29.6	32.9	36.2	39.4
cv-value:	16.2	19.5	23.0	26.7	30.5	34.4	38.2	42.1	45.8

Setting:	2.8	3.0	3.2	3.4	3.6	3.8	4.0	4.2	4.4
k_v-value:	42.5	45.6	48.5	51.3	54.0	56.5	58.9	61.2	63.3
cv-value:	49.4	53.0	56.4	59.7	62.8	65.7	68.5	71.2	73.6

Setting:	4.6	4.8	5.0	5.2	5.4	5.6	5.8	6.0	6.2
k_v-value:	65.2	67.1	68.7	70.3	71.7	73.0	74.1	75.2	76.1
cv-value:	75.9	78.0	79.9	81.7	83.3	84.8	86.2	87.4	88.5

Setting:	6.4	6.6	6.8	7.0	7.2	7.4	7.6	7.9 = open
k_v-value:	76.9	77.7	78.4	78.9	79.5	79.9	80.3	k_{vs} = 80.9
cv-value:	89.5	90.3	91.1	91.8	92.4	92.9	93.4	c_{vs} = 91.0

DIMENSIONS

V5032BLF (DN15)

Overview

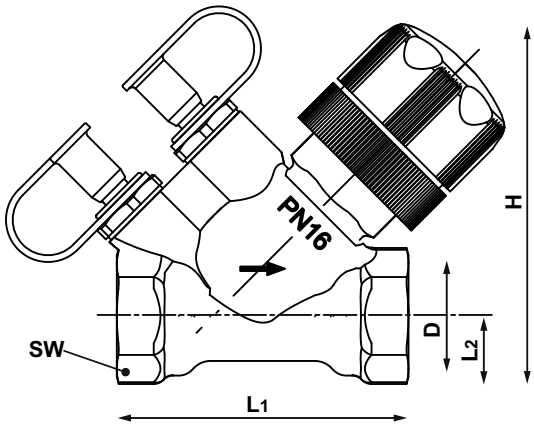

Parameter		Values
Connection sizes:	R	$^1/_2$"
Nominal sizes:	DN	15
Dimensions:	D	Rp$^1/_2$"
	H	82
	L_1	65
	L_2	15
	SW	27

Note: All dimensions in mm unless stated otherwise.

Note: Dimension 'H' refers to fully open valve.

V5032B (DN10 to DN80)

Overview

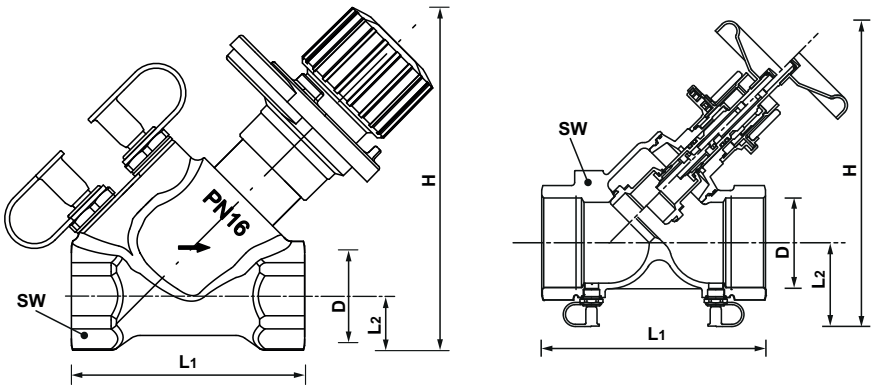

DN10 - DN50 DN65 - DN80

Parameter		Values								
Connection sizes:	R	$^3/_8$"	$^1/_2$"	$^3/_4$"	1"	1$^1/_4$"	1$^1/_2$"	2"	2$^1/_2$"	3"
Nominal sizes:	DN	10	15	20	25	32	40	50	65	80
Dimensions:	D	Rp$^3/_8$"	Rp$^1/_2$"	Rp$^3/_4$"	Rp1"	Rp1$^1/_4$"	Rp1$^1/_2$"	Rp2"	Rp2$^1/_2$"	Rp3"
	H	92	101	116	121	160	164	192	195	210
	L_1	65	65	75	90	110	120	150	180	200
	L_2	12.5	15	18	22	27	30	38	68	73
	SW	22	27	32	41	50	55	70	85	100

Note: All dimensions in mm unless stated otherwise.

Note: Dimension 'H' refers to fully open valve.

ORDERING INFORMATION

The following tables contain all the information you need to make an order of an item of your choice. When ordering, please always state the type, the ordering or the part number.

Options

DN:	k_{vs} (c_{vs})-value:	Weight: (g)	OS-No.:
DN10	0.63 (0.73)	400	V5032Y0010B
DN15	2.6 (3.0)	425	V5032Y0015B
DN15 BLF	0.43 (0.5)	350	V5032Y0015BLF
DN20	6.5 (7.5)	560	V5032Y0020B
DN25	6.6 (7.6)	720	V5032Y0025B
DN32	21.9 (25.3)	1230	V5032Y0032B
DN40	21.2 (24.5)	1320	V5032Y0040B
DN50	41.5 (48.0)	2380	V5032Y0050B
DN65	45.2 (52.6)	2300	V5032Y0065B
DN80	73.0 (84.9)	2300	V5032Y0080B

Accessories

	Description		Dimension	Part No.
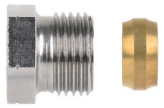	**FIG1/2CS**	**Compression fitting for COPPER and STEEL pipe** Consisting of compression nut and compression ring. For valves with internal thread. Note: Support inserts have to be used for copper or soft steel pipe with 1.0 mm wall thickness. Max. operating temperature 120 °C, max. operating pressure 10 bar.		
		1/2", DN15	10 mm	FIG1/2CS10
		1/2", DN15	12 mm	FIG1/2CS12
		1/2", DN15	14 mm	FIG1/2CS14
		1/2", DN15	15 mm	FIG1/2CS15
		1/2", DN15 (10pcs.)	15 mm	FIG1/2CS15 - 10
		1/2", DN15	16 mm	FIG1/2CS16
		3/4", DN20	18 mm	FIG3/4CS18
		3/4", DN20	22 mm	FIG3/4CS22
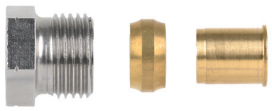	**FIG1/ 2CSS**	**Compression fitting for COPPER and STEEL pipe** Consisting of compression nut and compression ring and support insert. For valves with internal thread. Note: Support inserts have to be used for copper or soft steel pipe with 1.0 mm wall thickness. Max. operating temperature 120 °C, max. operating pressure 10 bar.		
		1/2", DN15	12 mm	FIG1/2CSS12
		1/2", DN15	14 mm	FIG1/2CSS14
		1/2", DN15	15 mm	FIG1/2CSS15
		1/2", DN15	16 mm	FIG1/2CSS16
		1/2", DN15	18 mm	FIG1/2CSS18
		3/4", DN20	18 mm	FIG3/4CSS18
	V5000Y	**Kombi-3-plus RED (V5000) measuring and shut-off valve for the supply** Note: For product information and diagrams see product data sheet 'V5000 Kombi-3-plus		
			1/2" (DN15)	V5000Y0015
			3/4" (DN20	V5000Y0020
			1" (DN25)	V5000Y0025
			1 1/4" (DN32)	V5000Y0032
			1 1/2" (DN40)	V5000Y0040
			2" (DN50)	V5000Y0050
			2 1/2" (DN65)	V5000Y0065
			3" (DN80)	V5000Y0080

	VB550Y	**Ball valve (VB550) Shut-off valve for the supply**		
			1/2" (DN15)	VB550Y0015
			3/4" (DN20	VB550Y0020
			1" (DN25)	VB550Y0025
			1 1/4" (DN32)	VB550Y0032
			1 1/2" (DN40)	VB550Y0040
			2" (DN50)	VB550Y0050
	VA2501	**Tamper-proof cap**		
		for valves DN10 - DN25		VA2501A010
		for valves DN32 - DN50		VA2501A032
	VA2510	**Insulation shells** Note: For product information see product data sheet 'VA2510B Insulation Shells'.		
		for valves DN15		VA2510C015
		for valves DN20		VA2510C020
		for valves DN25		VA2510C025
		for valves DN32		VA2510C032
		for valves DN40		VA2510C040
		for valves DN50		VA2510C050
	VA3401A	**Draining valve**		
			for all sizes	VA3401A008
	VA8201FV	**Presetting key**		
		for Kombi-II-plus V5032BLF valves DN15		VA8201FV02
	VA5032A	**Draining adapter for SafeCon™ connections** Can be used to drain the water from a SafeCon connection provided on the balancing valve families as shown below		
			for all dimensions	VA5032A001

Measuring equipment

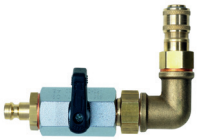	**VA3600**	**Measuring adapter (2 pcs.)**		
		For measuring computer VM241		VA3600C001
	VM242A	**BasicMes-2 handheld measuring computer** Note: To connect the VM241 BasicMes to SafeCon™ pressue test cocks please order measuring adapter VA3600C001 separately.		
		Computer is supplied with case and accessories	for all sizes	VM242A0101

Spare Parts

Overview

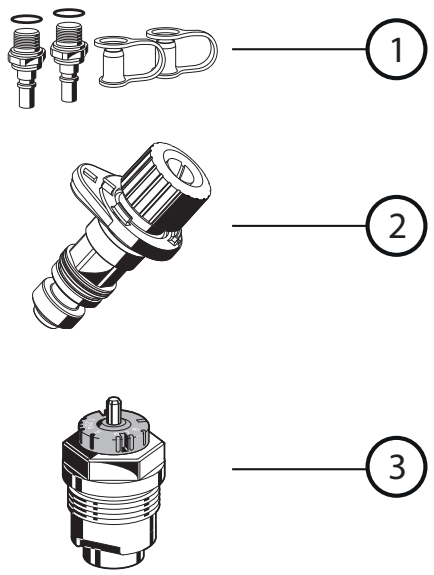

	Description	Dimension	Part No.
1	**Spare set of 2 pressure test cocks G$^1/_4$"**		
		DN10 - DN80	VS2600C001
2	**Valve insert for Kombi-II-plus V5032B**		
		DN10	VS5032DZ1010
		DN15	VS5032DZ1015
		DN20	VS5032DZ1020
		DN25	VS5032DZ1025
		DN32	VS5032DZ1032
		DN40	VS5032DZ1040
		DN50	VS5032DZ1050
3	**Valve insert for Kombi II-plus V5032BLF**		
		DN15	VS1200FV01

Manufactured for
and on behalf of
Pittway Sàrl, Z.A., La Pièce 4,
1180 Rolle, Switzerland
by its authorised representative
Ademco 1 GmbH

For more information
homecomfort.resideo.com/europe
Ademco 1 GmbH, Hardhofweg 40,
74821 MOSBACH, GERMANY
Phone: +49 6261 810
Fax: +49 6261 81309

© 2020 Resideo Technologies, Inc. All rights reserved.

Subject to change. EN0H-2316GE25 R0420